Body Repairs
Polo 1995 ➤
Edition 07.2014

Protected by copyright. Copying for private or commercial purposes, in part or in whole, is not permitted unless authorised by Volkswagen AG. Volkswagen AG does not guarantee or accept any liability with respect to the correctness of information in this document. Copyright by Volkswagen AG.

satelettronica

Repair Group overview for Body Repairs

Repair Group

00 - Technical data

50 - Body - front

51 - Body - centre

53 - Body - rear

Protected by copyright. Copying for private or commercial purposes, in part or in whole, is not permitted unless authorised by Volkswagen AG. Volkswagen AG does not guarantee or accept any liability with respect to the correctness of information in this document. Copyright by Volkswagen AG.

satelettronica

Technical information should always be available to the foremen and mechanics, because their careful and constant adherence to the instructions is essential to ensure vehicle road-worthiness and safety. In addition, the normal basic safety precautions for working on motor vehicles must, as a matter of course, be observed.

All rights reserved.
No reproduction without prior agreement from publisher.

Copyright © 2014 Volkswagen AG, Wolfsburg

Contents

00 - Technical data 1
1 Vehicle identification data 1
1.1 Type plate and vehicle identification number 1
1.2 Vehicle data sticker 1
2 Body dimensions 2
2.1 Body - front 2
2.2 Body, centre (2-door) 9
2.3 Body, centre (4-door) 11
2.4 Body - rear 15
2.5 Floor group 18
3 Alignment jig 20
3.1 Overview 20
4 Galvanized body parts 28
5 Strengthened steel sheet metal 29

50 - Body - front 30
1 Renewing engine bracket 30
1.1 Left engine console 30
1.2 Right engine bracket 31
2 Renewing support 33
2.1 Removing 33
3 Renewing front wheel housing 35
3.1 Removing 35
4 Renewing front wheel housing - part section 38
4.1 Removing 38
5 Renewing longitudinal member before subframe mounting - part section 40
5.1 Removing 40
6 Renewing longitudinal member behind subframe mounting - part section 43
6.1 Removing 43
7 Renewing front section of longitudinal member 45
7.1 Removing 45

51 - Body - centre 49
1 Renewing roof 49
1.1 Removing 49
2 Renewing front roof cross member 51
2.1 Removing 51
3 Renewing rear cross member 53
3.1 Removing 53
4 Renewing outer side panel - part section (2-door) 55
4.1 Removing 55
5 Renewing outer side panel - part section (4-door) 58
5.1 Removing 58
6 Renewing A-pillar - part section 60
6.1 Removing 60
7 Renewing B-pillar - part section (2-door) 64
7.1 Removing 64
8 Renewing B-pillar - part section 11.99 ► (2-door) 66
8.1 Removing 66
9 Renewing B-pillar (4-door) 69

Protected by copyright. Copying for private or commercial purposes, in part or in whole, is not permitted unless authorised by Volkswagen AG. Volkswagen AG does not guarantee or accept any liability with respect to the correctness of information in this document. Copyright by Volkswagen AG.
satelettronica

9.1 Removing . . . 69
10 Renewing outer side member (2-door) . . . 73
10.1 Removing . . . 73
11 Renewing inner side member reinforcement 11.99 ▸ (2-door) . . . 75
11.1 Removing . . . 75
12 Renewing inner side member reinforcement 11.99 ▸ (4-door) . . . 78
12.1 Removing . . . 78
13 Renewing outer side member (4-door) . . . 81
13.1 Removing . . . 81
14 Renewing inner side member (2-door) . . . 84
14.1 Removing . . . 84
15 Renewing inner side member (4-door) . . . 86
15.1 Removing . . . 86
16 Renewing floor panel . . . 88
16.1 Removing . . . 88

53 - Body - rear . . . 93
1 Renewing rear cross panel . . . 93
1.1 Removing . . . 93
2 Renewing rear luggage compartment floor - part section . . . 96
2.1 Removing . . . 96
3 Renewing rear longitudinal member - part section . . . 98
3.1 Removing . . . 98
4 Renewing side panel - part section (2-door) . . . 100
4.1 Removing . . . 100
5 Renewing side panel - part section GTI 11.99 ▸ (2-door) . . . 103
5.1 Removing . . . 103
6 Renewing side panel - part section GTI 11.99 ▸ (2-door) . . . 107
6.1 Removing . . . 107
7 Renewing side panel - part section (4-door) . . . 112
7.1 Removing . . . 112
8 Renewing side panel - part section (2-door) . . . 115
8.1 Removing . . . 115
9 Renewing reinforcement for wheel housing . . . 118
9.1 Removing . . . 118
10 Renewing rear wheel housing . . . 120
10.1 Removing . . . 120
11 Renewing rear wheel housing - part section . . . 124
11.1 Removing . . . 124
12 Renewing outer wheel housing liner . . . 126
12.1 Removing . . . 126

Protected by copyright. Copying for private or commercial purposes, in part or in whole, is not permitted unless authorised by Volkswagen AG. Volkswagen AG does not guarantee or accept any liability with respect to the correctness of information in this document. Copyright by Volkswagen AG.
satelettronica

00 – Technical data

1 Vehicle identification data

(VKI000307; Edition 07.2014)

1.1 Type plate and vehicle identification number

The identification plate is located on the left of the front lock carrier.

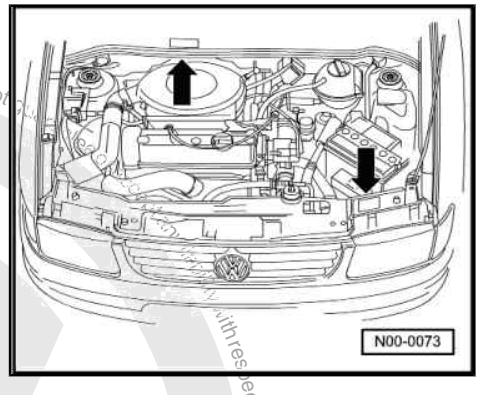

The vehicle identification number (chassis number) is stamped on the rear bulkhead of engine compartment. It can be seen through a window in the plenum chamber cover.

On some vehicles the identification plate is attached to the passenger door lock pillar.

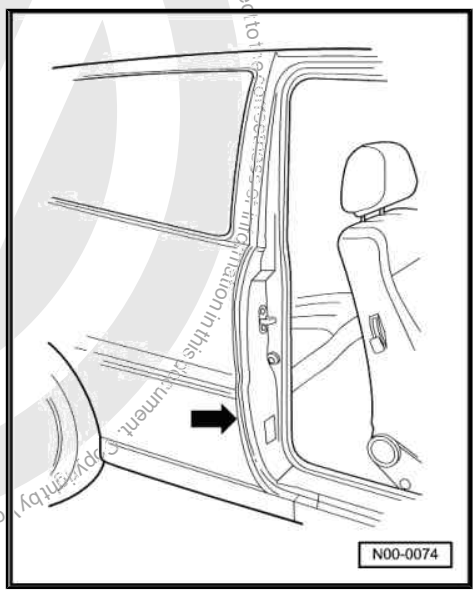

1.2 Vehicle data sticker

The vehicle data plate is glued on the rear left cross panel in the luggage compartment.

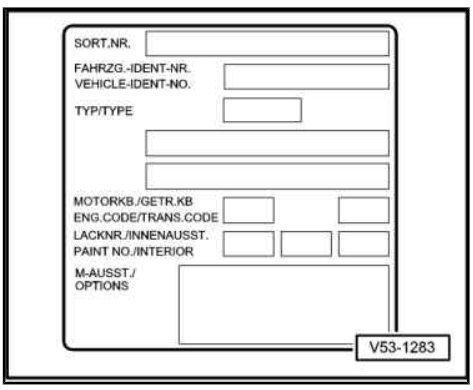

Protected by copyright. Copying for private or commercial purposes, in part or in whole, is not permitted unless authorised by Volkswagen AG. Volkswagen AG does not guarantee or make any representation in this document with respect to its accuracy or completeness. Copyright by Volkswagen AG.
satelettronica

2 Body dimensions

2.1 Body - front

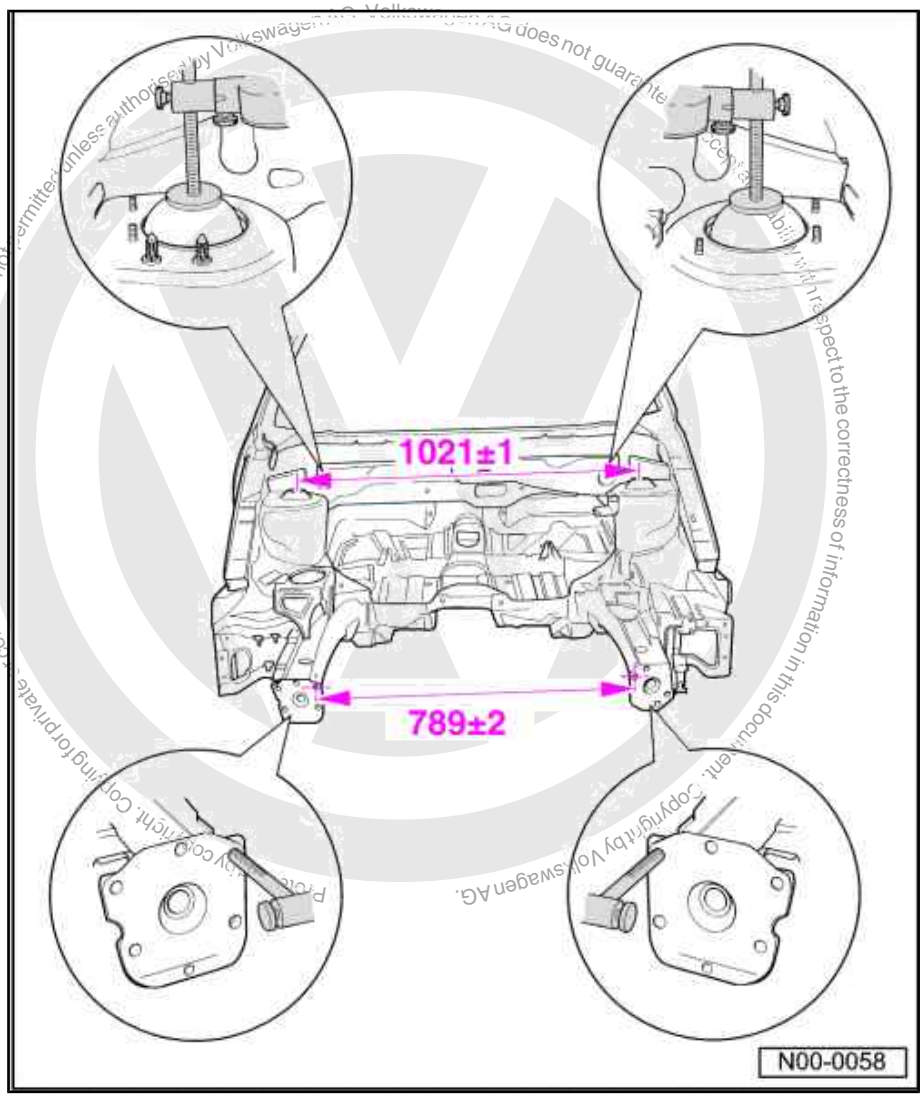

Distance between suspension strut mountings

Distance between front longitudinal members

satelettronica

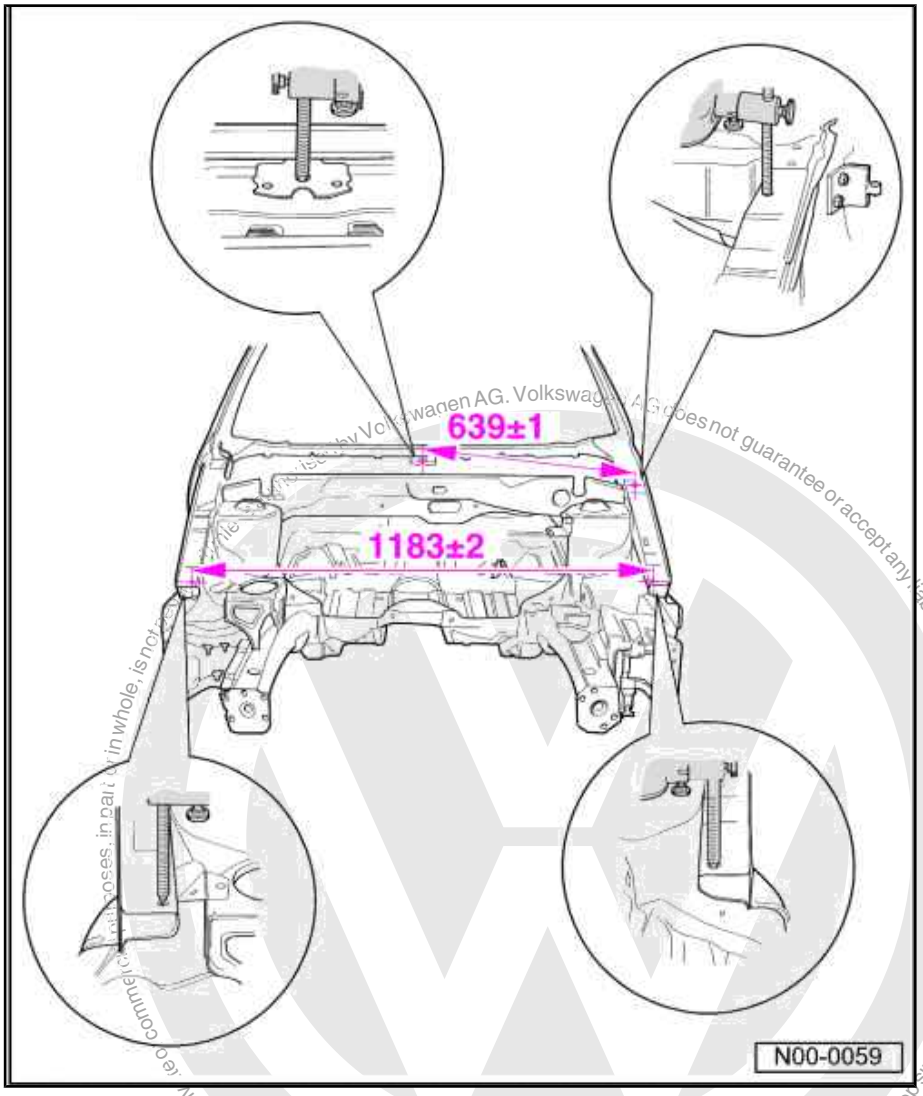

Distance between windscreen wiper mounting and wing mounting

Distance between wheel housing corners

satelettronica
Protected by copyright. Copyright by Volkswagen AG.

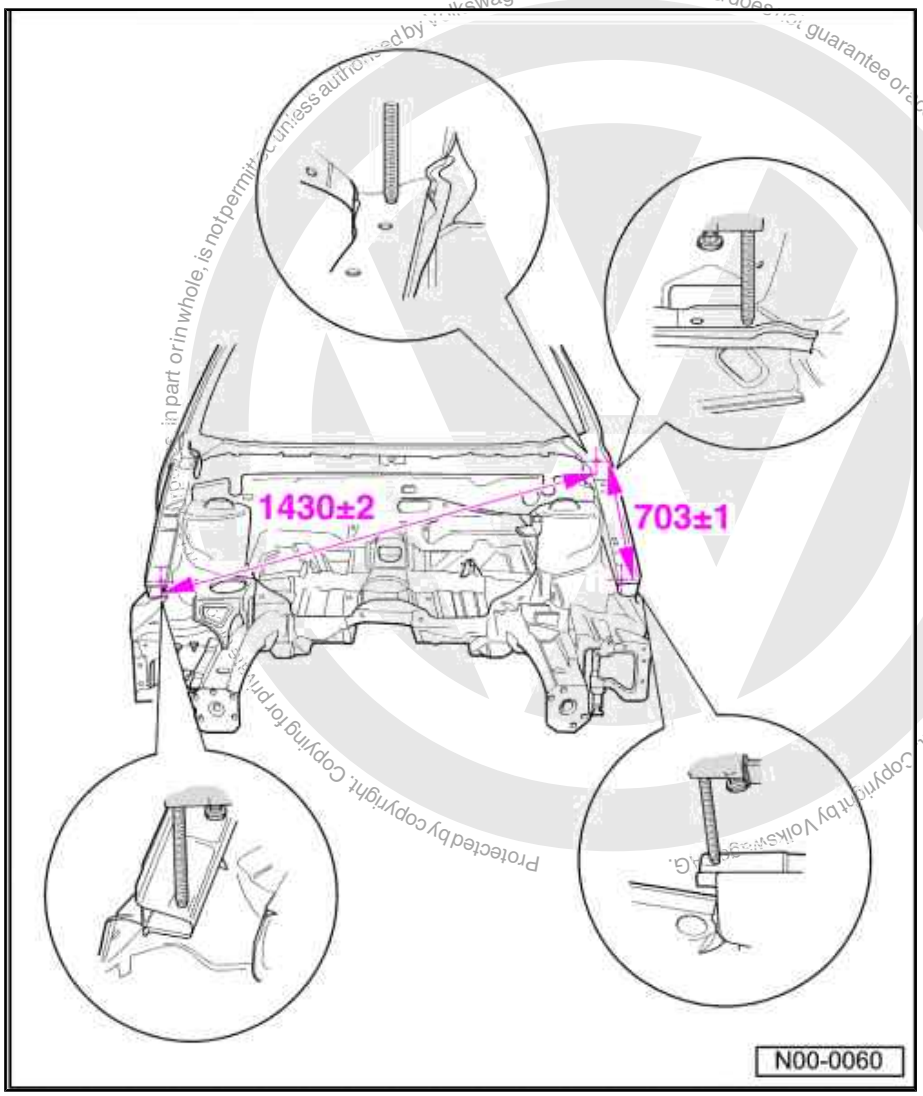

Diagonal distance between bonnet hinge mounting and wheel housing corner

Distance between bonnet hinge mounting and wheel housing corner

satelettronica

Protected by copyright. Copying for private or commercial purposes, in part or in whole, is not permitted unless authorised by Volkswagen AG. Volkswagen AG does not guarantee or accept any liability with respect to the information in this document.

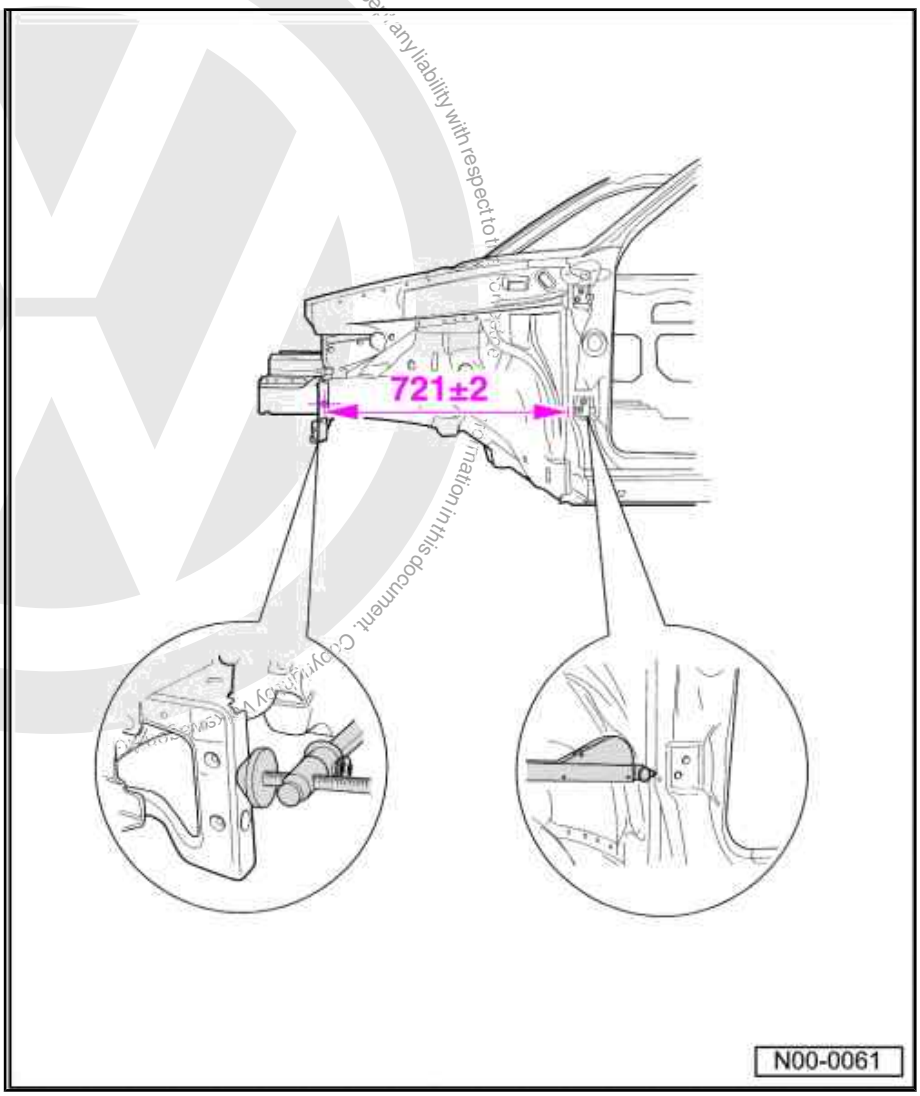

Distance between A-pillar and bumper bracket

satelettronica

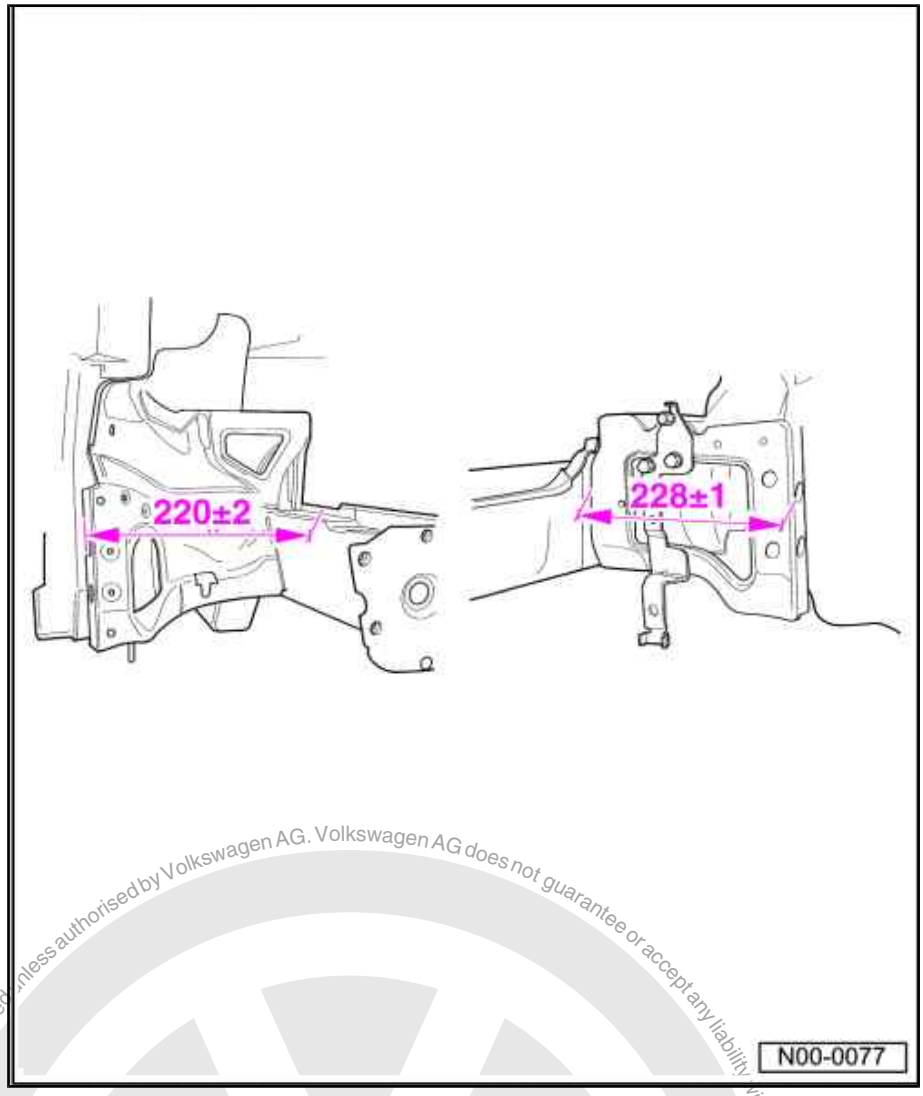

Distance between longitudinal mounting and bumper bracket

Protected by copyright. Copying for private or commercial purposes, in part or in whole, is not permitted unless authorised by Volkswagen AG. Volkswagen AG does not guarantee or accept any liability with respect to the correctness of information in this document. Copyright by Volkswagen AG.
satelettronica

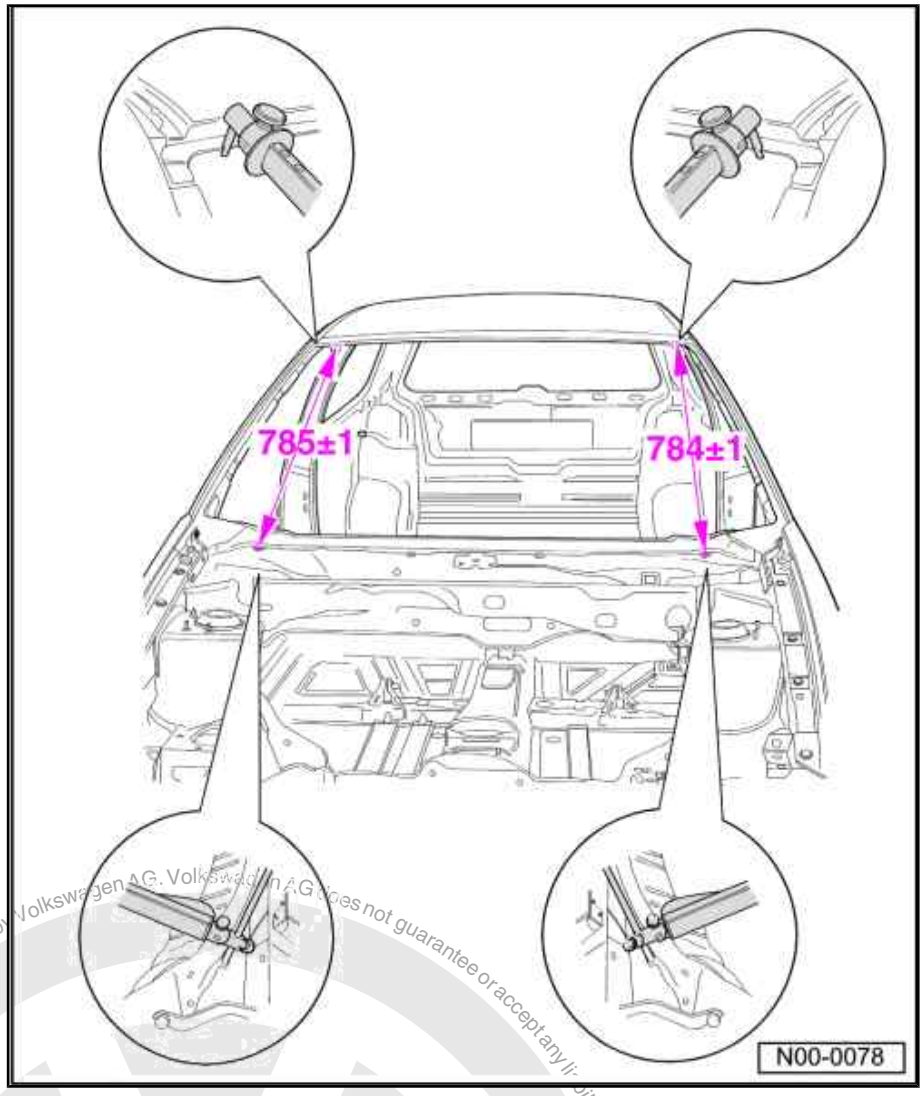

Distance between hole in plenum chamber flange and roof flange

Protected by copyright. Copying for private or commercial purposes, in part or in whole, is not permitted unless authorised by Volkswagen AG. Volkswagen AG does not guarantee or accept any liability with respect to the correctness of information in this document. Copyright by Volkswagen AG.
satelettronica

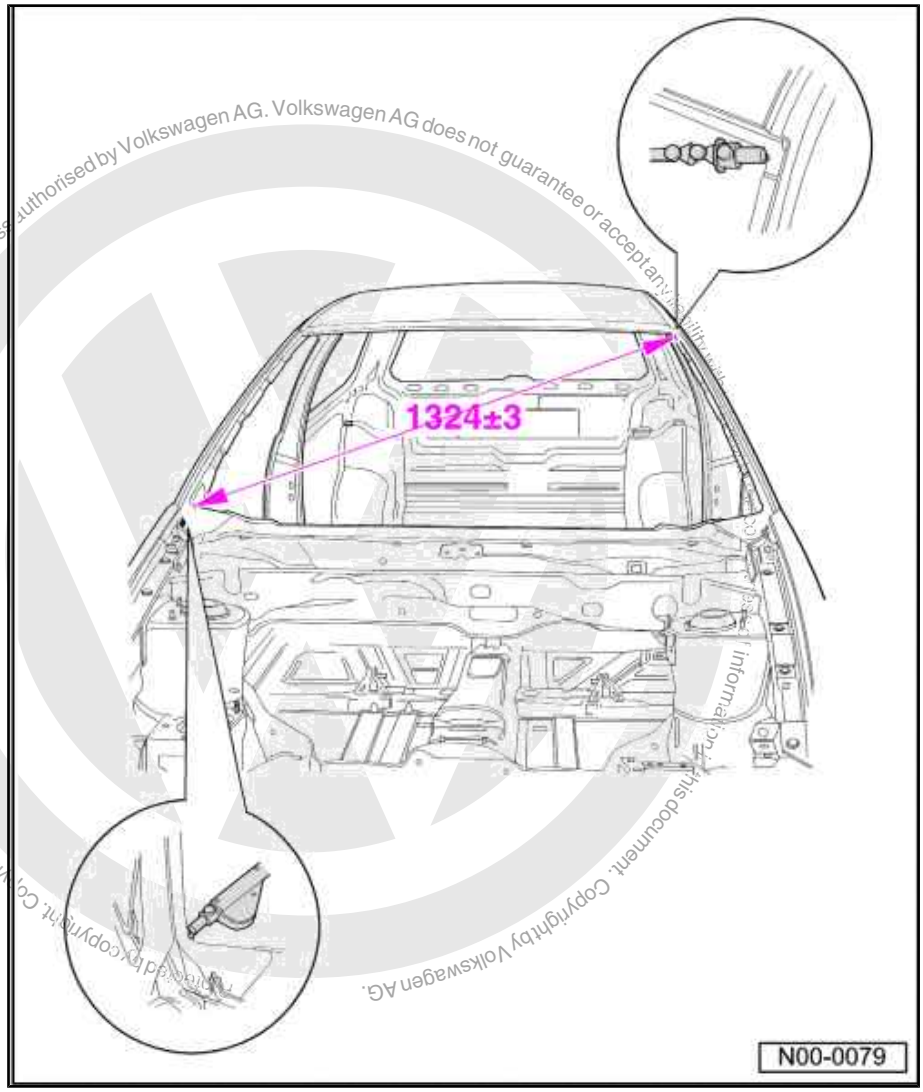

Protected by copyright. Copying for private or commercial purposes, in part or in whole, is not permitted unless authorised by Volkswagen AG. Volkswagen AG does not guarantee or accept any liability with respect to the correctness of information in this document. Copyright by Volkswagen AG.

satelettronica

Diagonal distance across windscreen aperture

2.2 Body, centre (2-door)

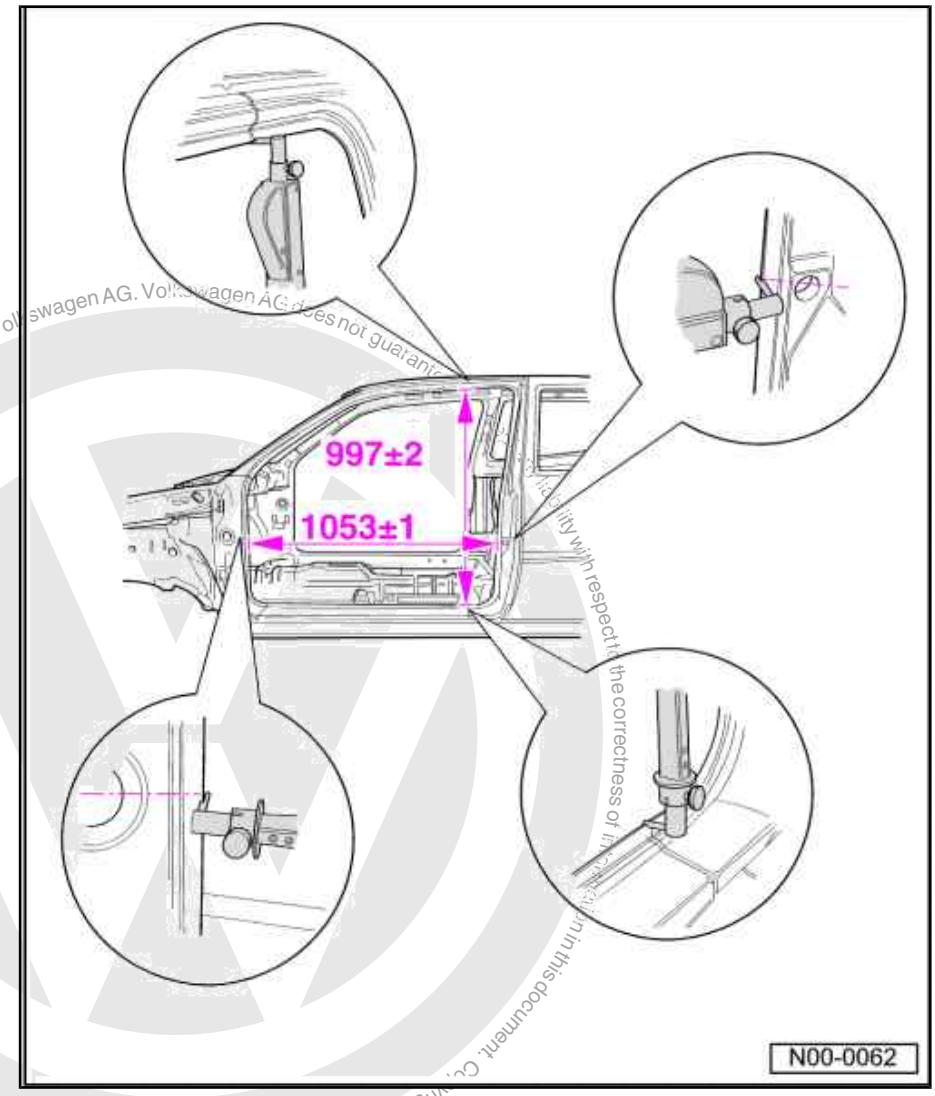

Front door aperture

Protected by copyright. Copying for private or commercial purposes, in part or in whole, is not permitted unless authorised by Volkswagen AG. Volkswagen AG does not guarantee the correctness of information in this document. Copyright by Volkswagen AG.
satelettronica

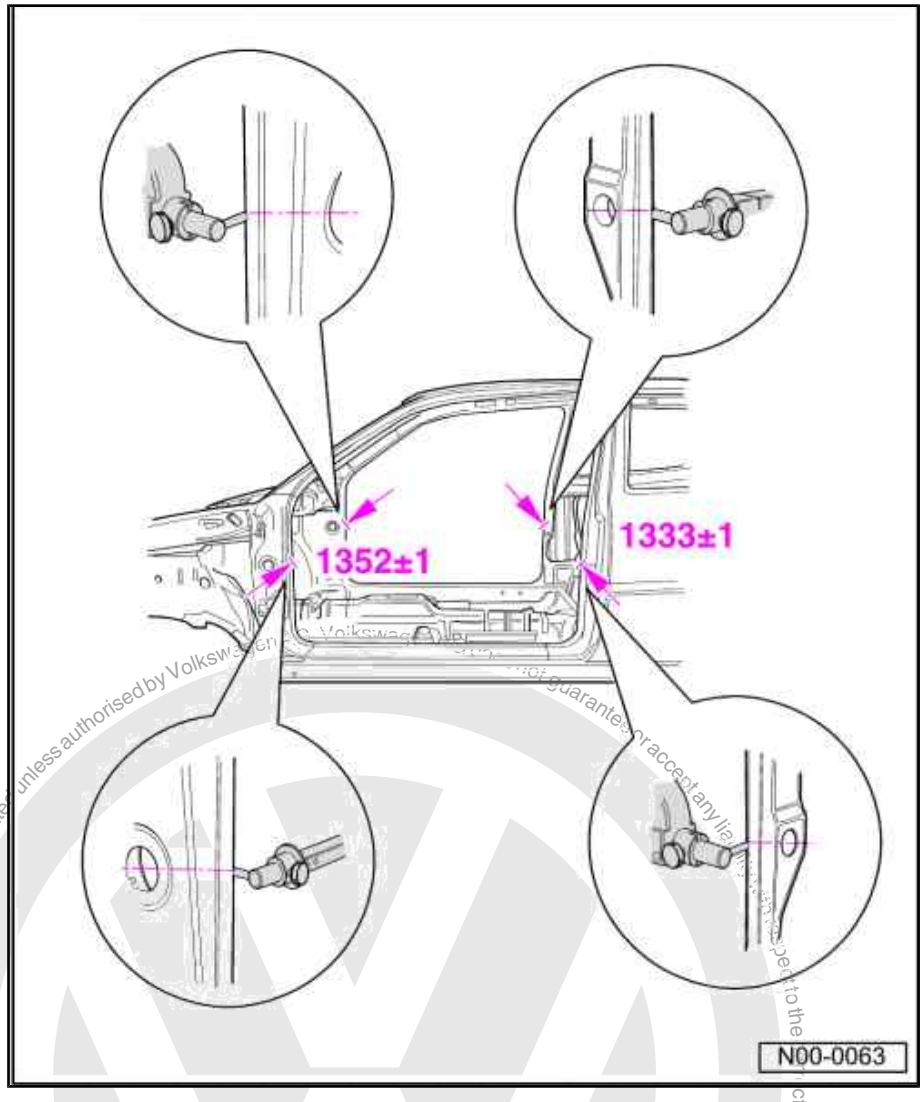

Protected by copyright. Copying for private or commercial purposes, in part or in whole, is not permitted unless authorised by Volkswagen AG. Copyright by Volkswagen AG.
satelettronica

Distance between A-pillars (2 and 4-door vehicle)

Distance between B-pillars

2.3 Body, centre (4-door)

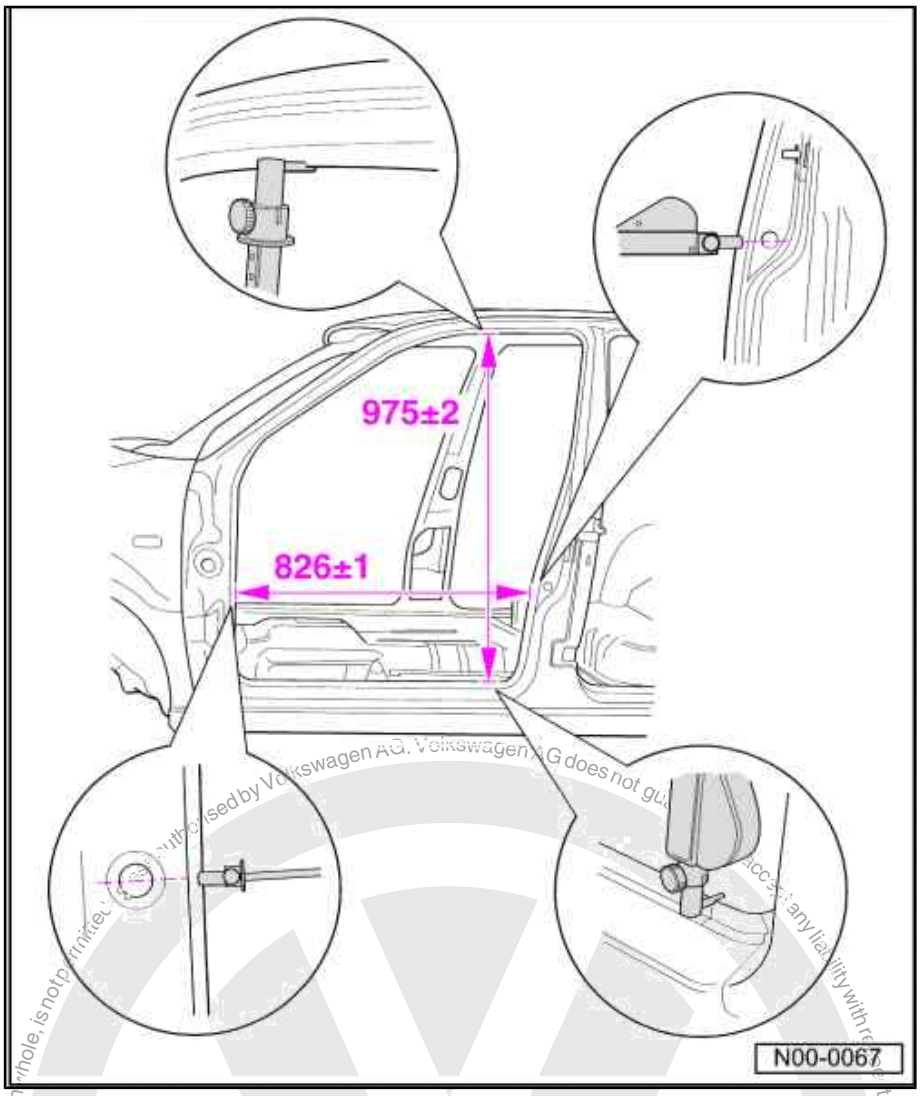

Front door aperture

satelettronica
Protected by copyright. Copying for private or commercial purposes, in part or in whole, is not permitted unless authorised by Volkswagen AG. Volkswagen AG does not guarantee or accept any liability with respect to the correctness of information in this document. Copyright by Volkswagen AG.

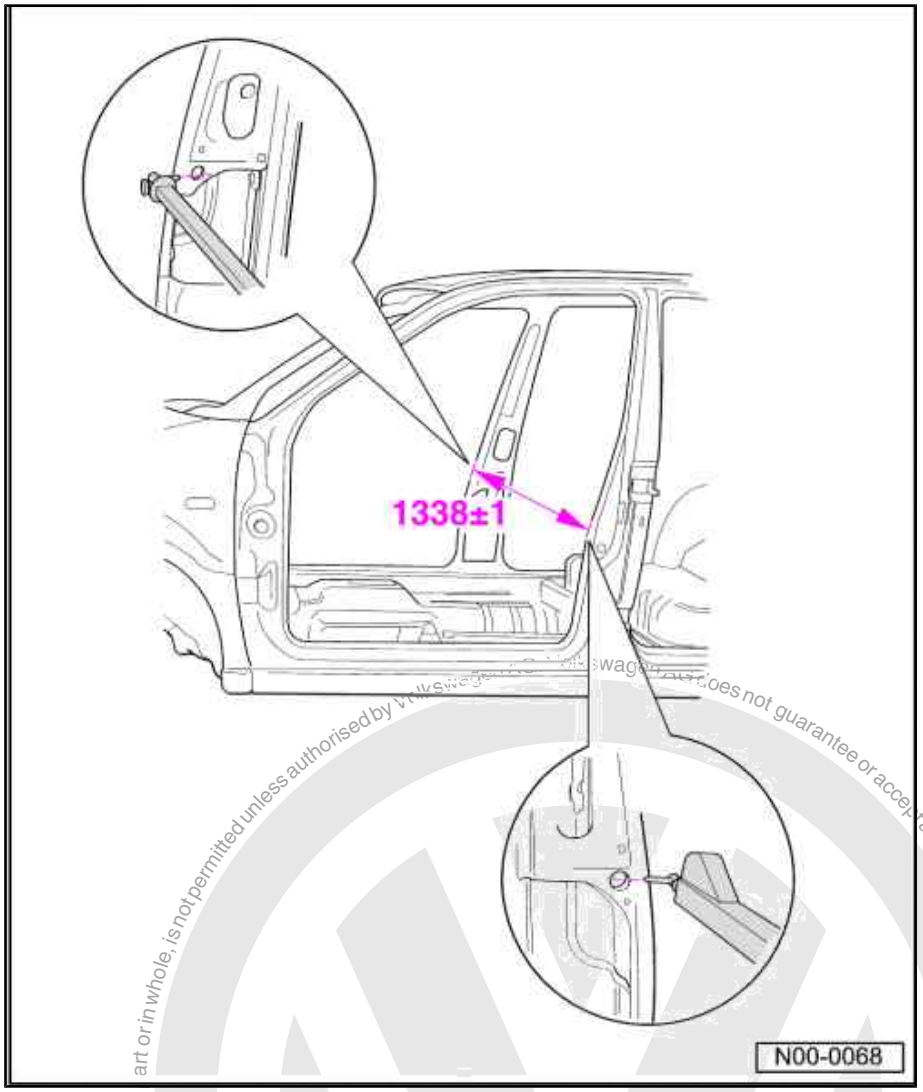

Distance between B-pillars

Protected by copyright. Copying for private or commercial purposes, in part or in whole, is not permitted unless authorised by Volkswagen AG. Volkswagen AG does not guarantee or accept any liability with respect to the correctness of information in this document. Copyright by Volkswagen AG.
satelettronica

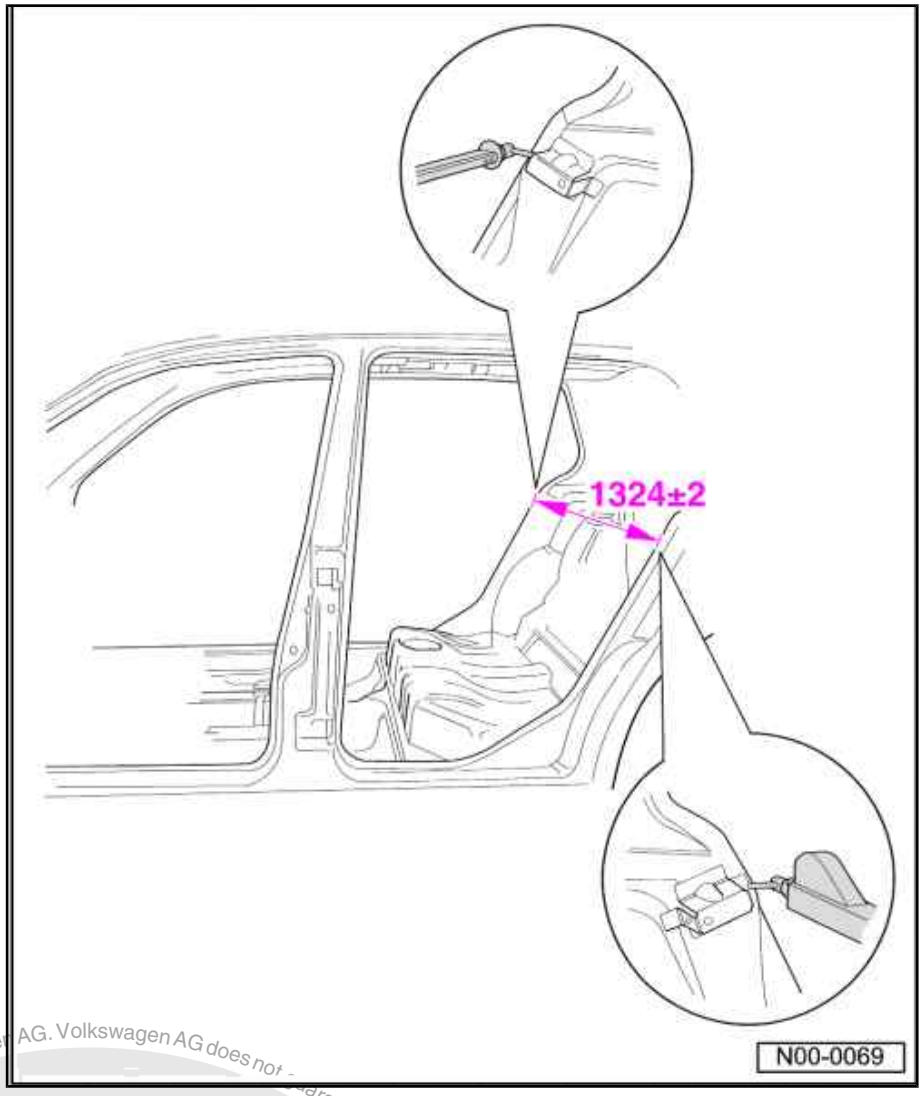

Distance between C-pillars

satelettronica
Protected by copyright. Copying for private or commercial purposes, in part or in whole, is not permitted unless authorised by Volkswagen AG. Volkswagen AG does not guarantee or accept any liability with respect to the correctness of information in this document. Copyright by Volkswagen AG.

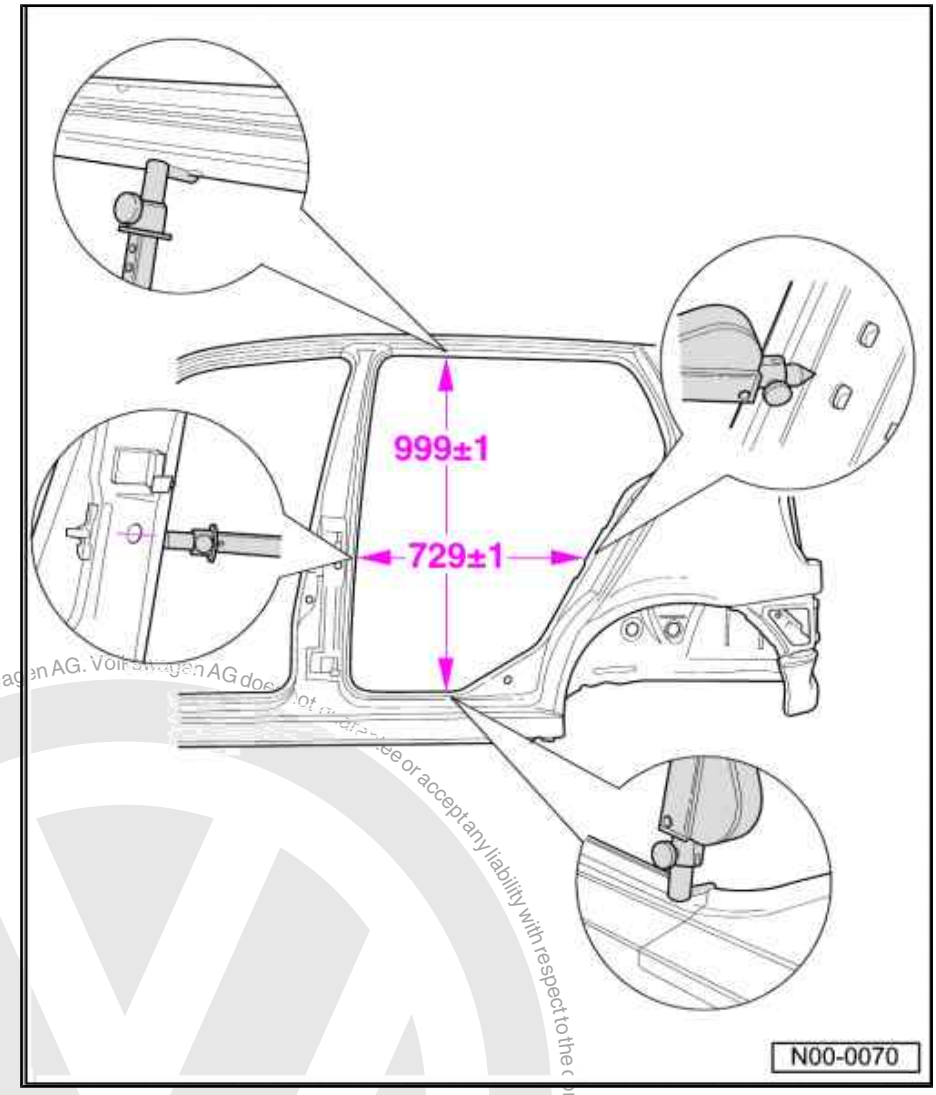

Protected by copyright. Copyright for private or commercial purposes, in part or in whole, is not permitted unless authorised by Volkswagen AG. Volkswagen AG does not guarantee or accept any liability with respect to the correctness of information in this document. Copyright by Volkswagen AG.
satelettronica

Rear door aperture

2.4 Body - rear

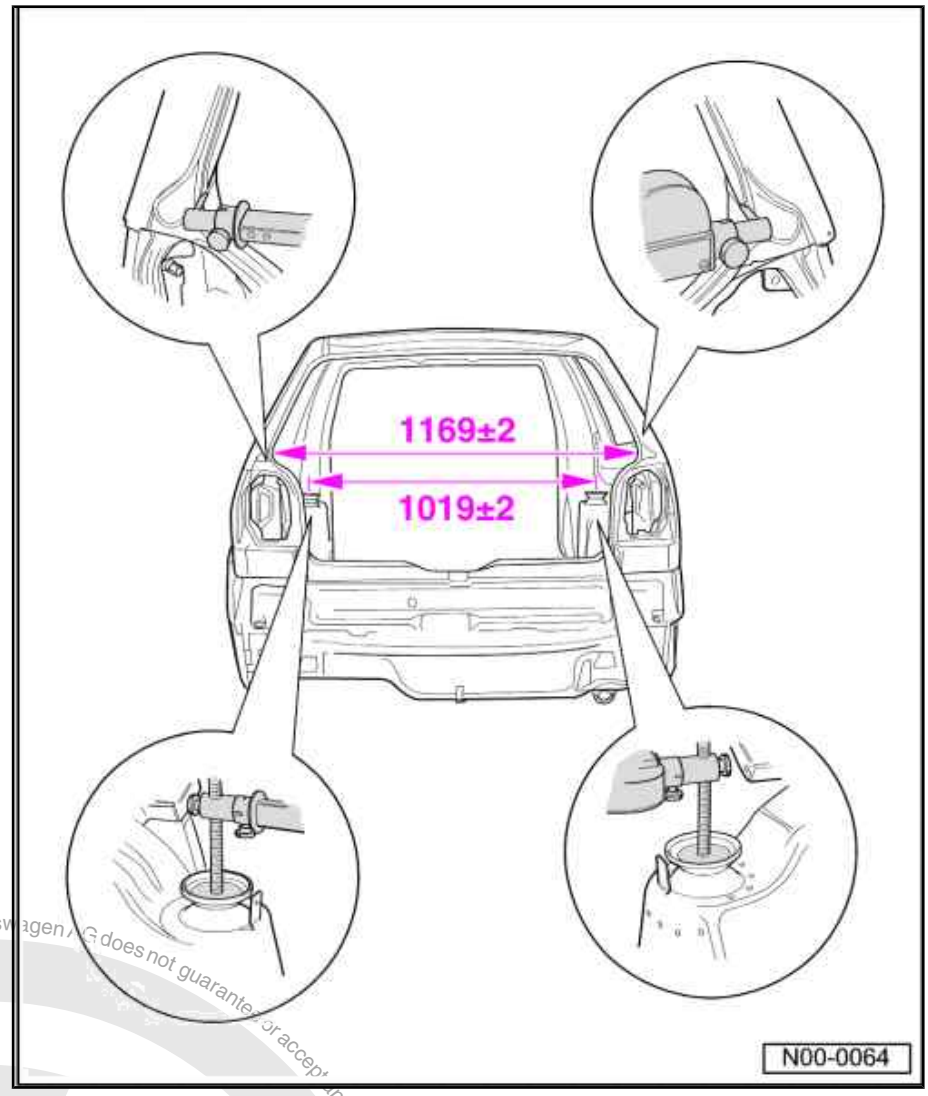

Distance between suspension strut mountings

Distance between inner side panels

satelettronica
Protected by copyright. Copying for private or commercial purposes, in part or in whole, is not permitted unless authorised by Volkswagen AG. Volkswagen AG does not guarantee or accept any liability with respect to the correctness of information in this document. Copyright by Volkswagen AG.

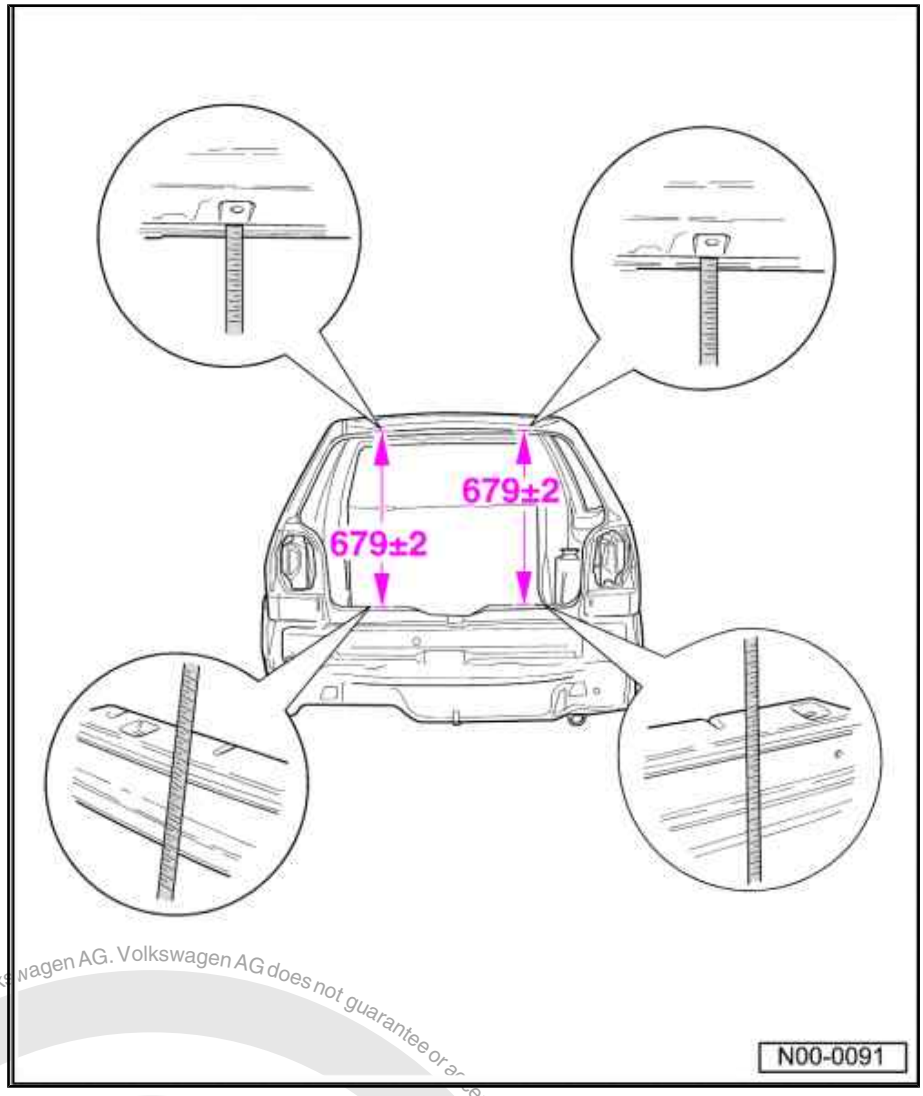

Distance between cross panel flange and roof flange

Protected by copyright. Copying for private or commercial purposes, in part or in whole, is not permitted unless authorised by Volkswagen AG. Volkswagen AG does not guarantee or accept any liability with respect to the correctness of information in this document. Copyright by Volkswagen AG.
satelettronica

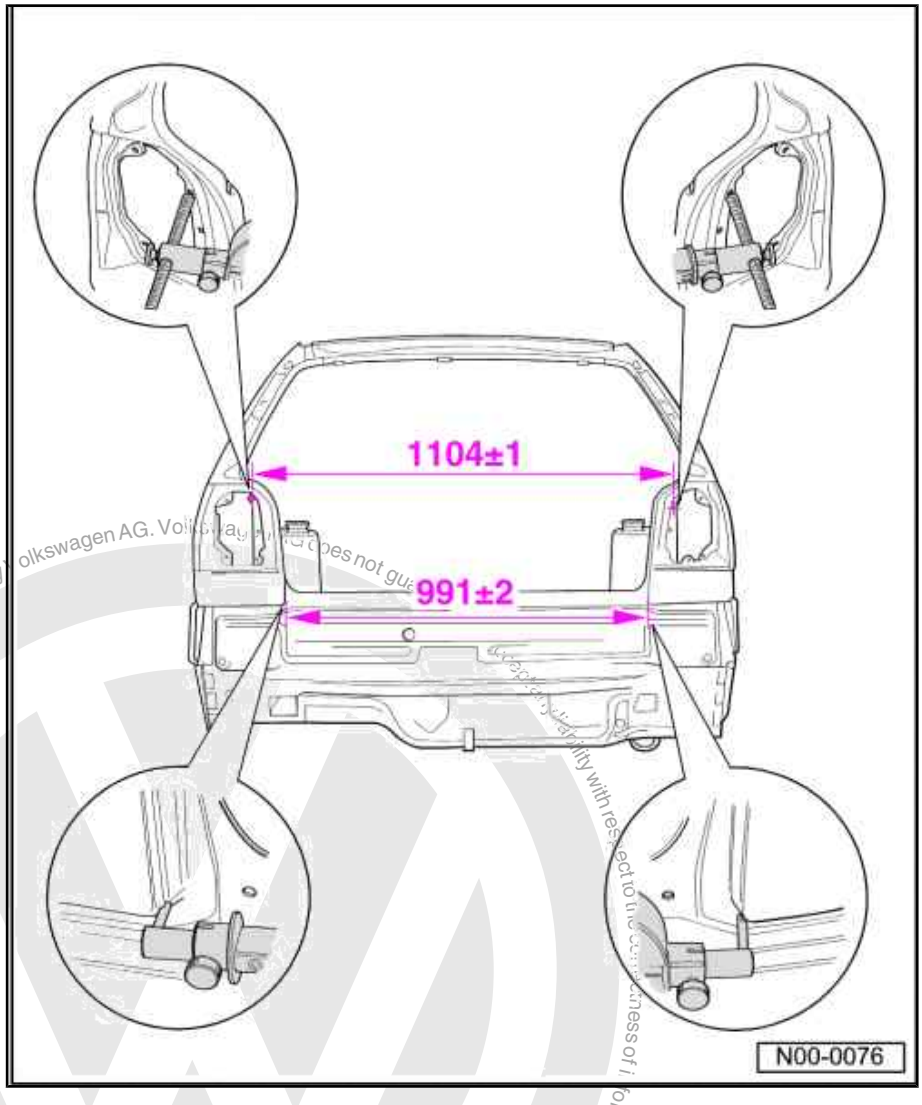

Protected by copyright. Copying for private or commercial purposes, in part or in whole, is not permitted unless authorised by Volkswagen AG. Volkswagen AG does not guarantee or accept any liability with respect to the correctness of information in this document. Copyright by Volkswagen AG.
satelettronica

Distance between mounting drillings for tail light cluster

Distance between inserts

2.5 Floor group

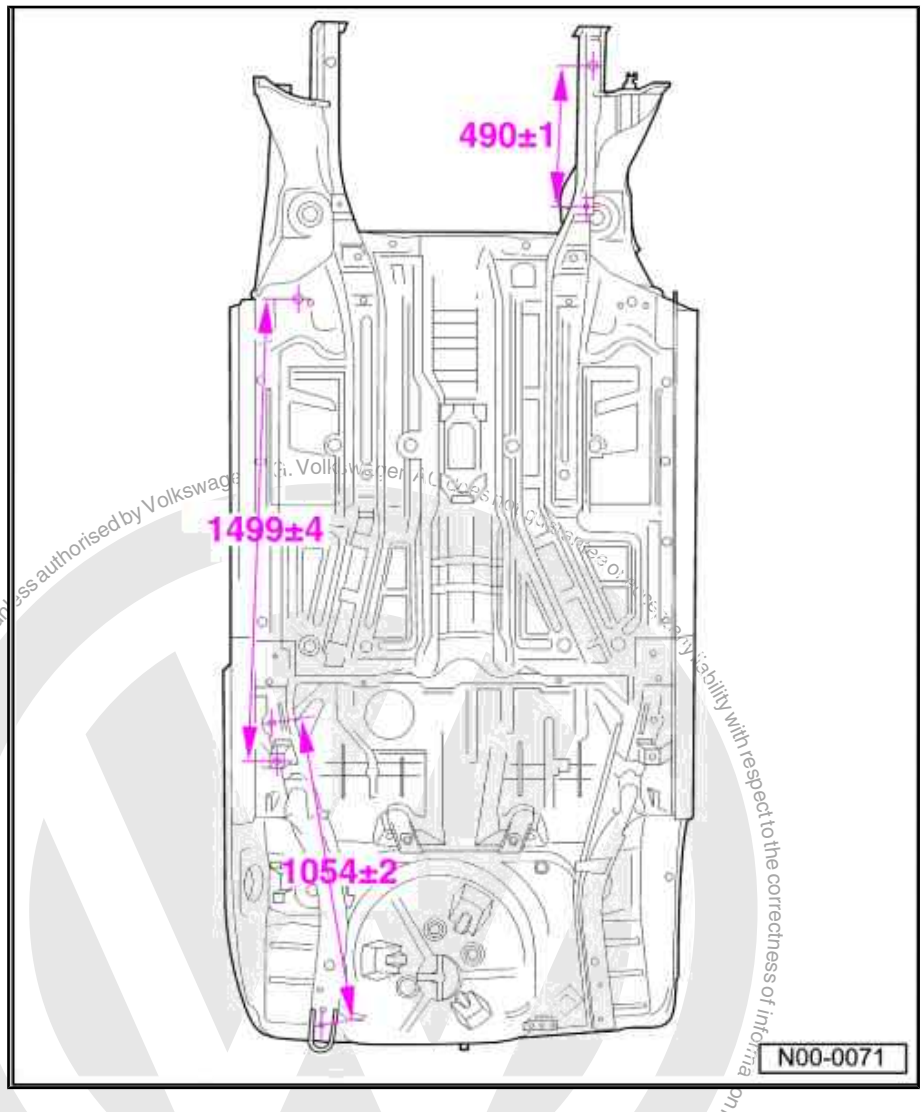

Protected by copyright. Copying for private or commercial purposes, in part or in whole, is not permitted unless authorised by Volkswagen AG. Copyright by Volkswagen AG.
satelettronica

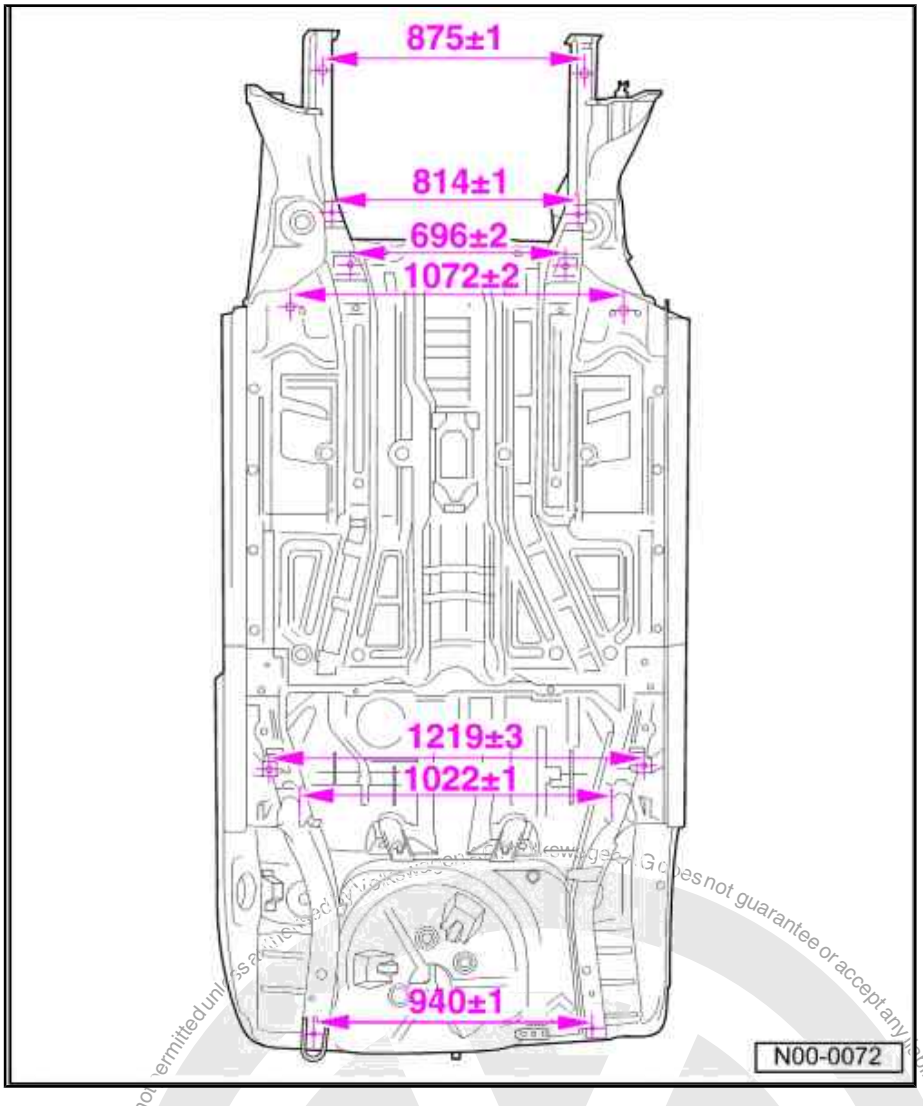

satelettronica
Protected by copyright. Copying for private or commercial purposes, in part or in whole, is not permitted unless authorized by Volkswagen AG. Copyright by Volkswagen AG. Does not guarantee or accept any liability with respect to the correctness of information in this document.

Protected by copyright. Copyright by Volkswagen AG. Volkswagen AG does not guarantee or accept any liability with respect to the correctness of information in this document. Copyright by Volkswagen AG, whole, is not permitted unless authorised by Volkswagen AG. Volkswagen AG does not guarantee or accept any liability with respect to the correctness of information in this document. Copyright by Volkswagen AG.

3 Alignment jig

3.1 Overview

Note

- *The item numbers in the figure are identical with the end numbers on the alignment bracket fixtures.*
- *The required basic size is given for the alignment bracket mounting.*
- *In the following figures the right side of the vehicle is shown.*

2 - MZ 200

4 - MZ 200 and alignment bracket mounting -2-

6 - MZ141

8 - MZ 260

10 - MZ 602 and centring piece -11-

11 - Centring piece, left and right identical

12 - MZ 260

16 - MZ 080

18 - Mounting without MZ, and front production mounting -20-

20 - Front production mounting, left and right identical

22 - MZ 140

24 - MZ 080 and TV 400

26 - MZ 080, securing plate -27- and sleeve E13

27 - Securing plate, left and right identical

28 - MZ 602 and centring piece -30-

30 - Centring piece, left and right identical

32 - MZ 200

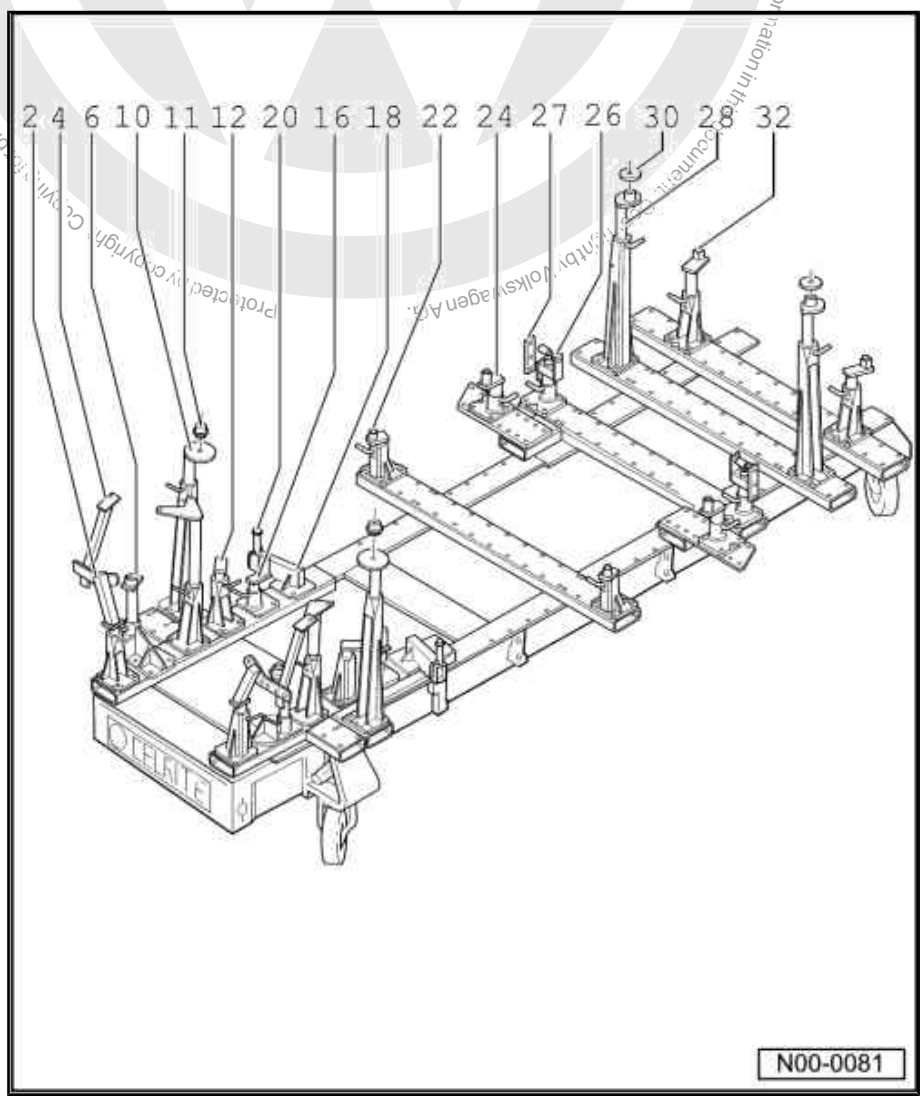

Overview of front alignment bracket positions

satelettronica

2 - Front longitudinal member / wheel housing upper corner

4 - Front longitudinal member

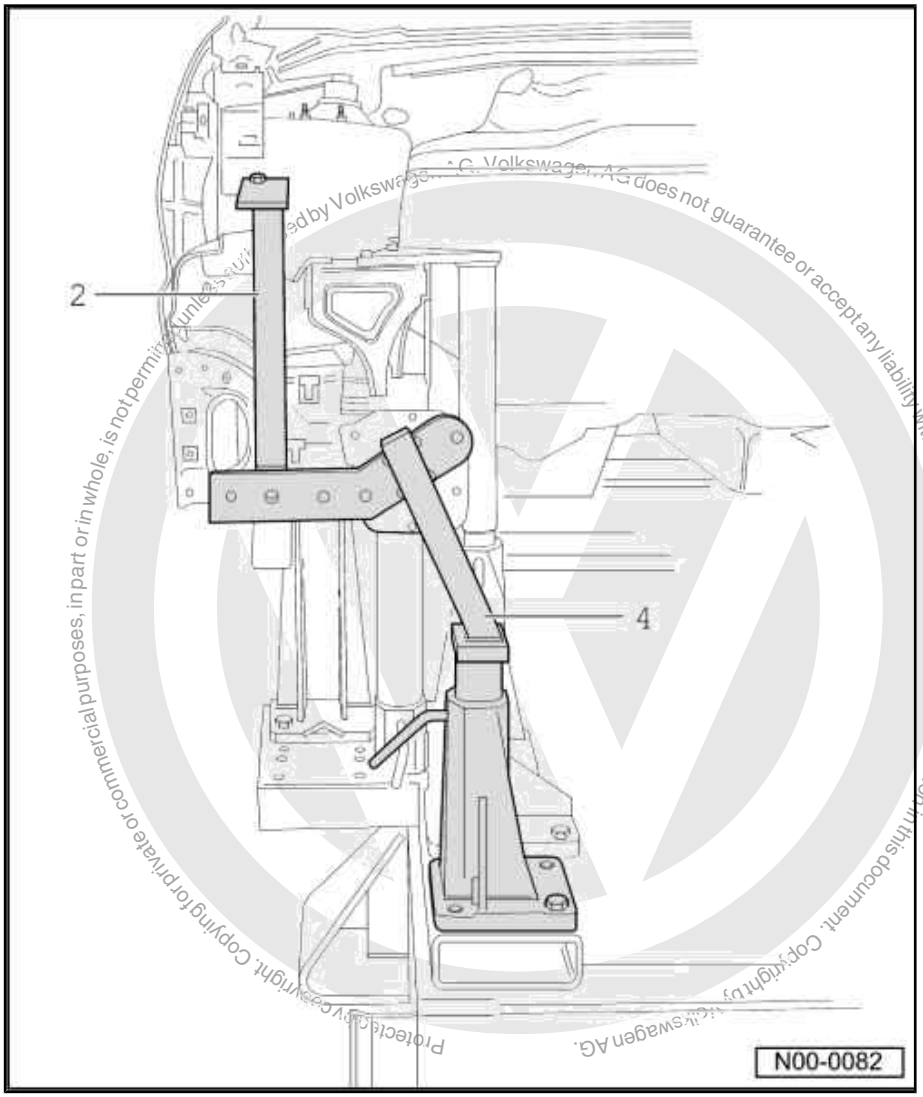

Protected by Volkswagen AG. Copyright. Copying for private or commercial purposes, in part or in whole, is not permitted unless authorised by Volkswagen AG. Volkswagen AG does not guarantee or accept any liability with respect to the correctness of information in this document. Copyright by Volkswagen AG.
satelettronica

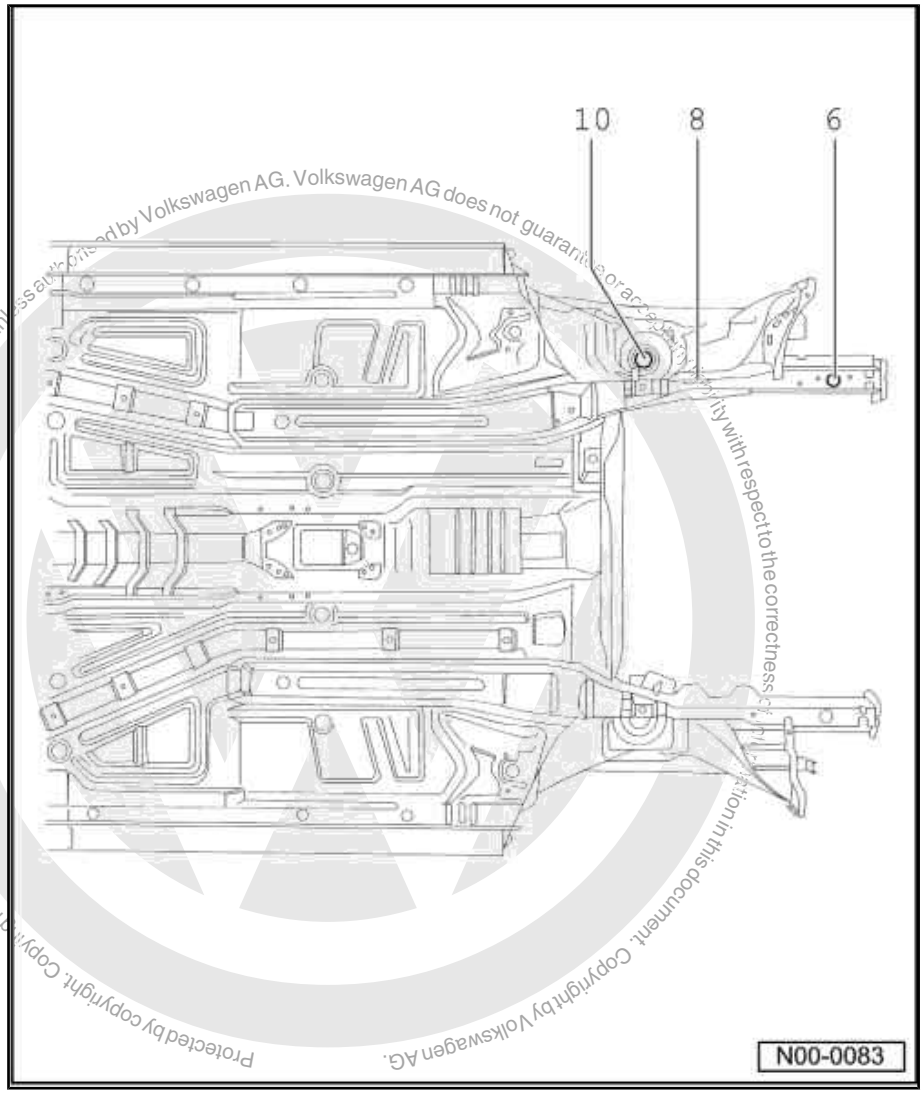

Protected by copyright. Copyright by Volkswagen AG.
Copyright by Volkswagen AG. Volkswagen AG does not guarantee or accept any liability with respect to the correctness of information in this document.
Protected by copyright. Copying for private or commercial purposes, in part or in whole, is not permitted unless authorised by Volkswagen AG.

Overview of front alignment bracket positions

satelettronica

6 - Drilling in longitudinal member

8 - Subframe mounting

10 - Suspension strut mounting

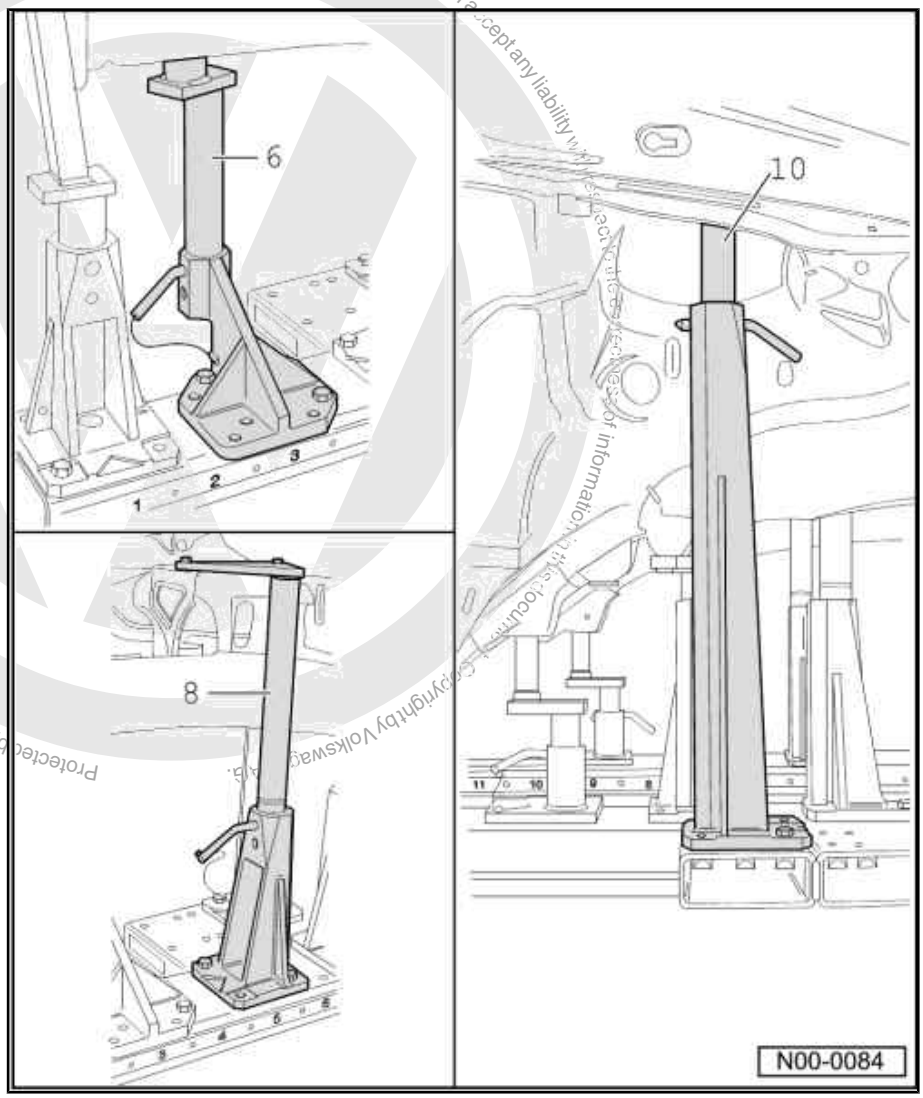

Protected by copyright. Copyright by Volkswagen AG. Volkswagen AG does not guarantee or accept any liability with respect to the correctness of information in this document. Copying for private or commercial purposes, in part or in whole, is not permitted unless authorised by Volkswagen AG.
satelettronica

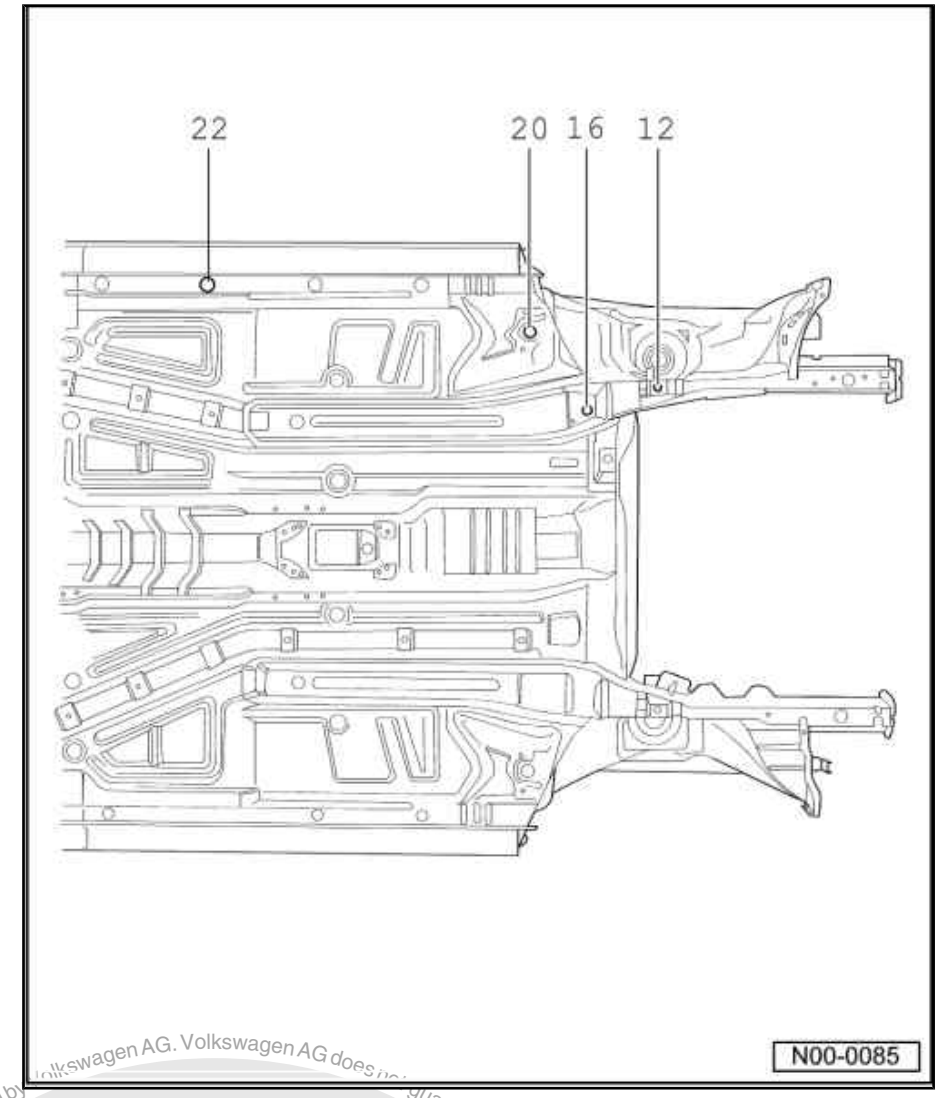

Overview - middle alignment bracket positions

Protected by copyright. Copying for private or commercial purposes, in part or in whole, is not permitted unless authorised by Volkswagen AG. Volkswagen AG does not guarantee or accept any liability with respect to the correctness of information in this document. Copyright by Volkswagen AG.
satelettronica

12 - Subframe mounting

16 - Subframe mounting

18 - Bracket

20 - Front production mounting

22 - Drilling in floor panel

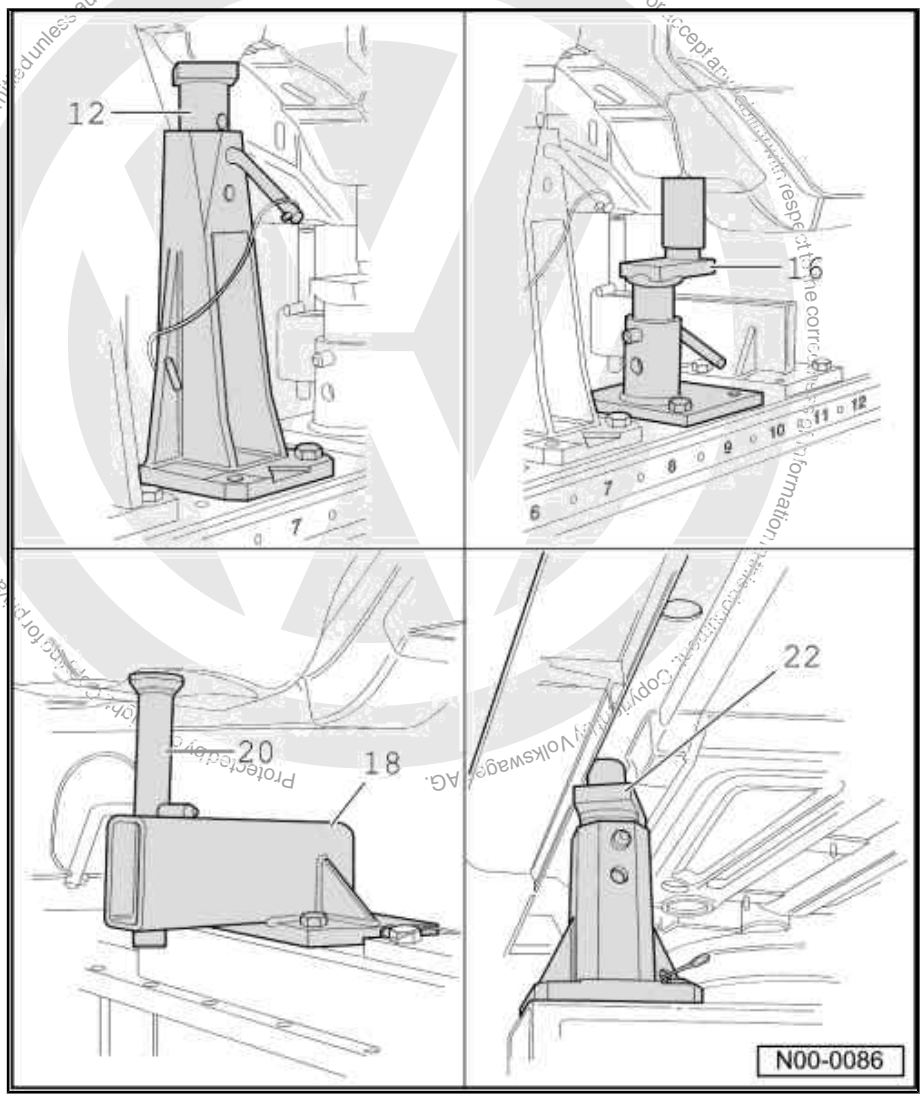

satelettronica

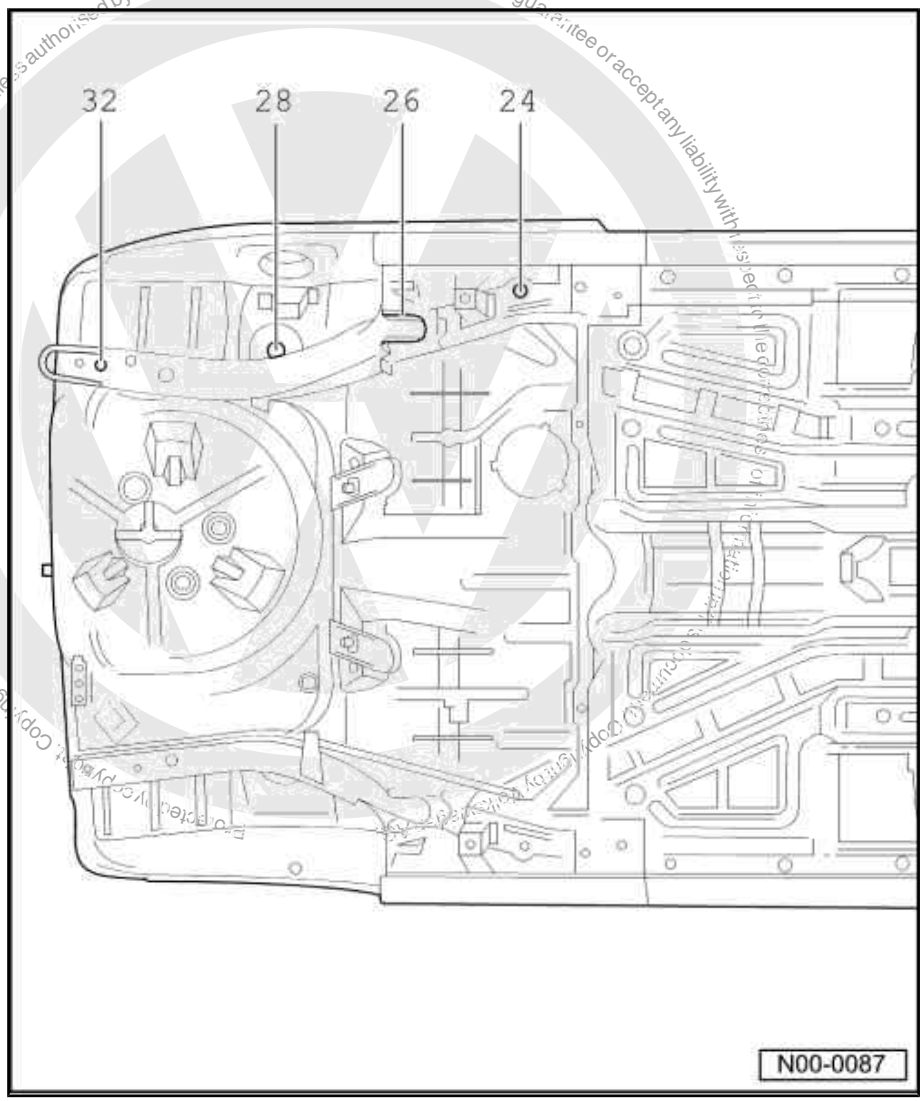

Overview of rear alignment bracket positions

satelettronica

24 - Drilling in longitudinal member

26 - Rear axle mounting

27 - Rear axle mounting

28 - Suspension strut mounting

32 - Rear longitudinal member

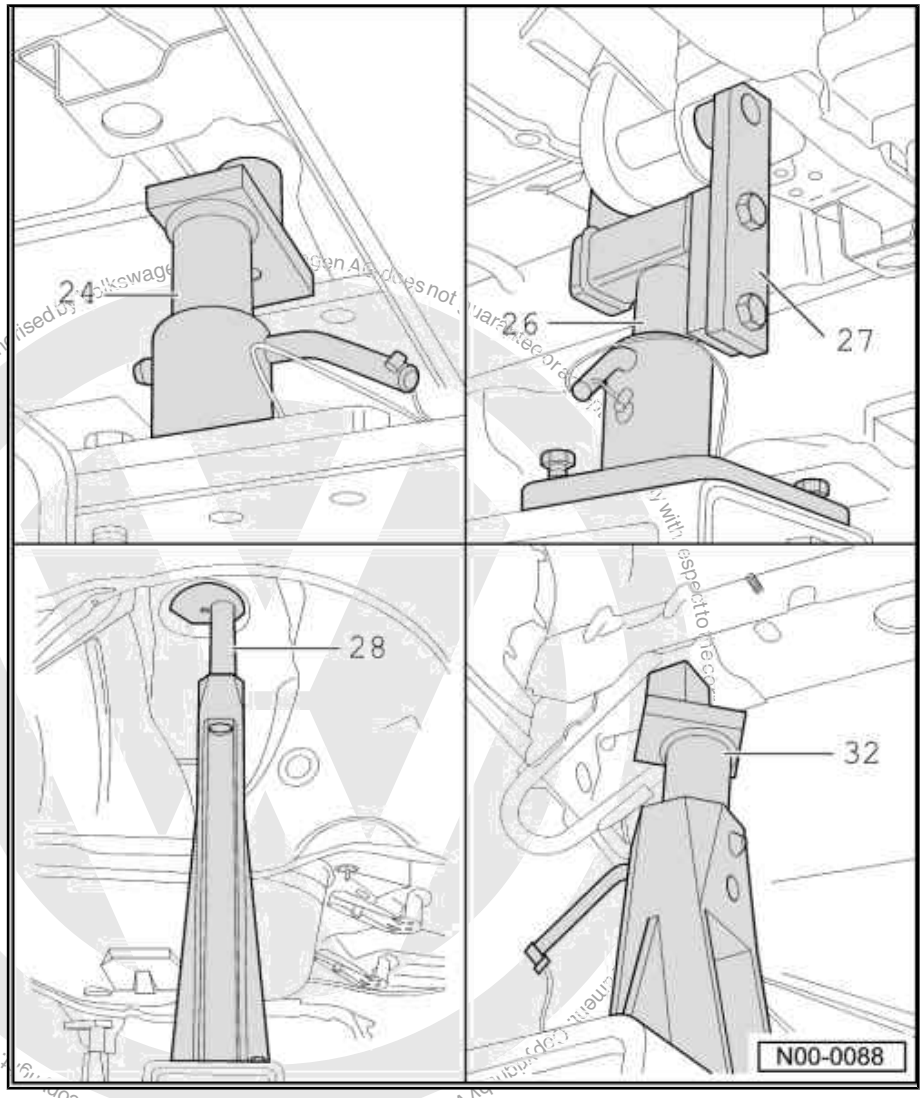

Protected by copyright. Copying for private or commercial purposes, in part or in whole, is not permitted unless authorised by Volkswagen AG. Volkswagen AG does not guarantee or accept any liability with respect to the correctness of information in this copy.
satelettronica

4 Galvanized body parts

1 - Inner side galvanized

2 - Both sides galvanized

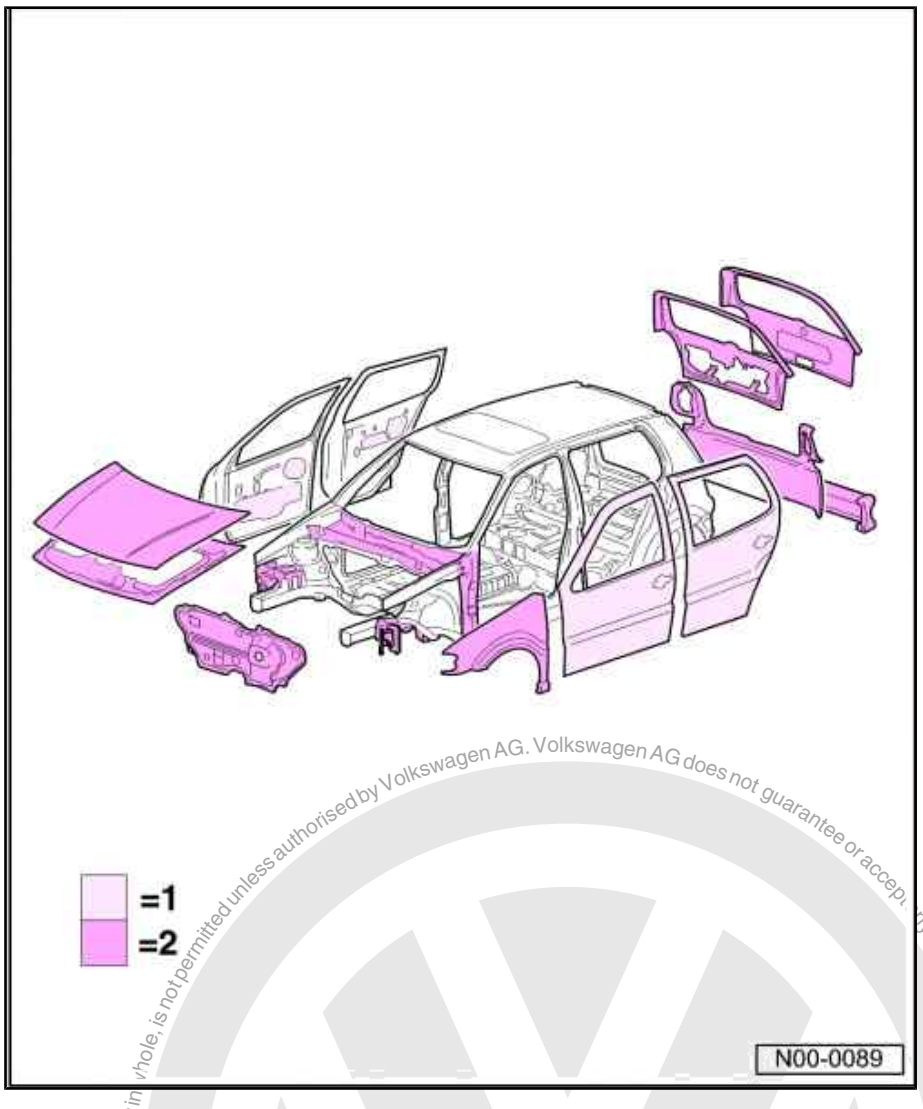

Protected by copyright. Copying for private or commercial purposes, in part or in whole, is not permitted unless authorised by Volkswagen AG. Volkswagen AG does not guarantee or accept any liability with respect to the correctness of information in this document. Copyright by Volkswagen AG.
satelettronica

5 Strengthened steel sheet metal

1 - Strengthened steel sheet metal ⇒ Workshop manual general information, chapter: Repair procedures

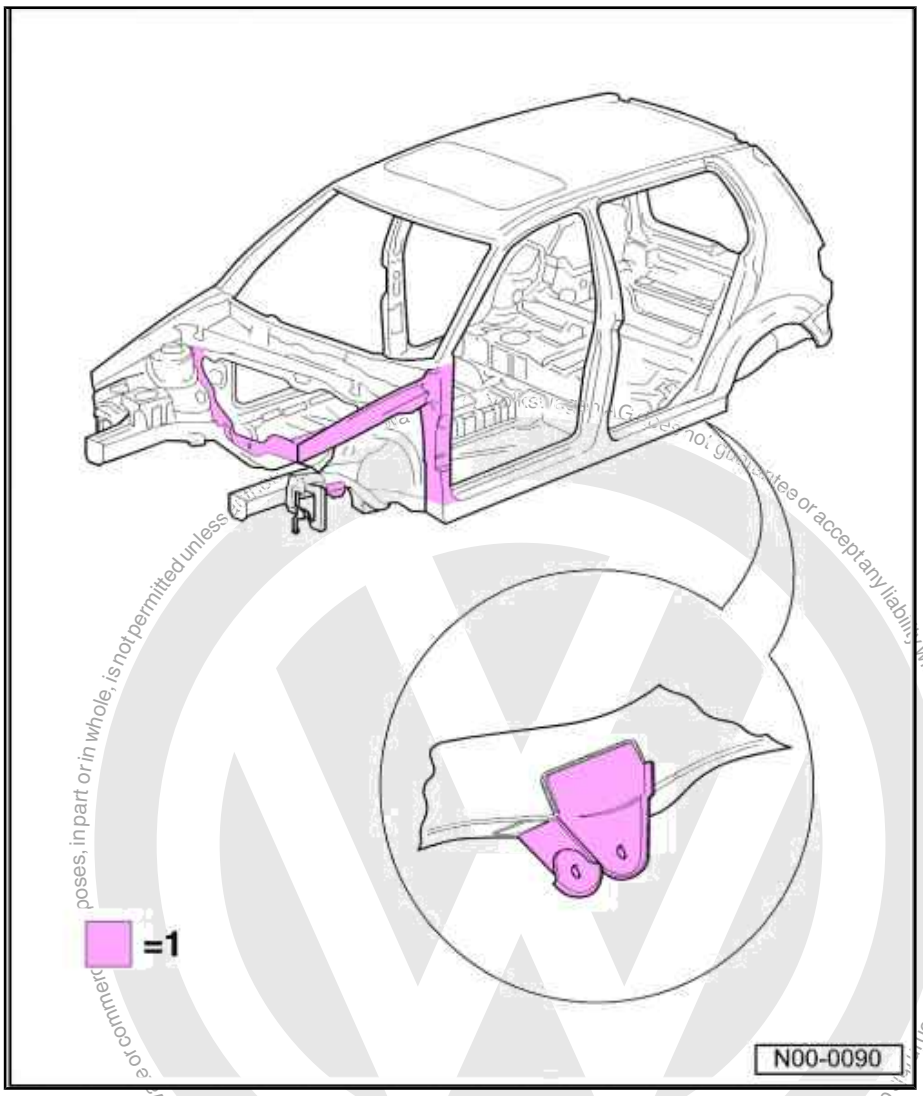

Protected by copyright. Copying for private or commercial purposes, in part or in whole, is not permitted unless authorised by Volkswagen AG. Volkswagen AG does not guarantee or accept any liability with respect to the correctness of information in this document. Copyright by Volkswagen AG.
satelettronica

Protected by copyright. Copying for private or commercial purposes, in part or in whole, is not permitted unless authorised by Volkswagen AG. Volkswagen AG does not guarantee or accept any liability with respect to the correctness of information in this document. Copyright by Volkswagen AG.

50 – Body - front

RO: 50 40 55 50

1 Renewing engine bracket

WARNING

Observe safety notes!

⇒ General Information; Body Repairs, General Body Repairs ; Chapter 1 - Safety notes .

1.1 Left engine console

1.1.1 Cutting locations

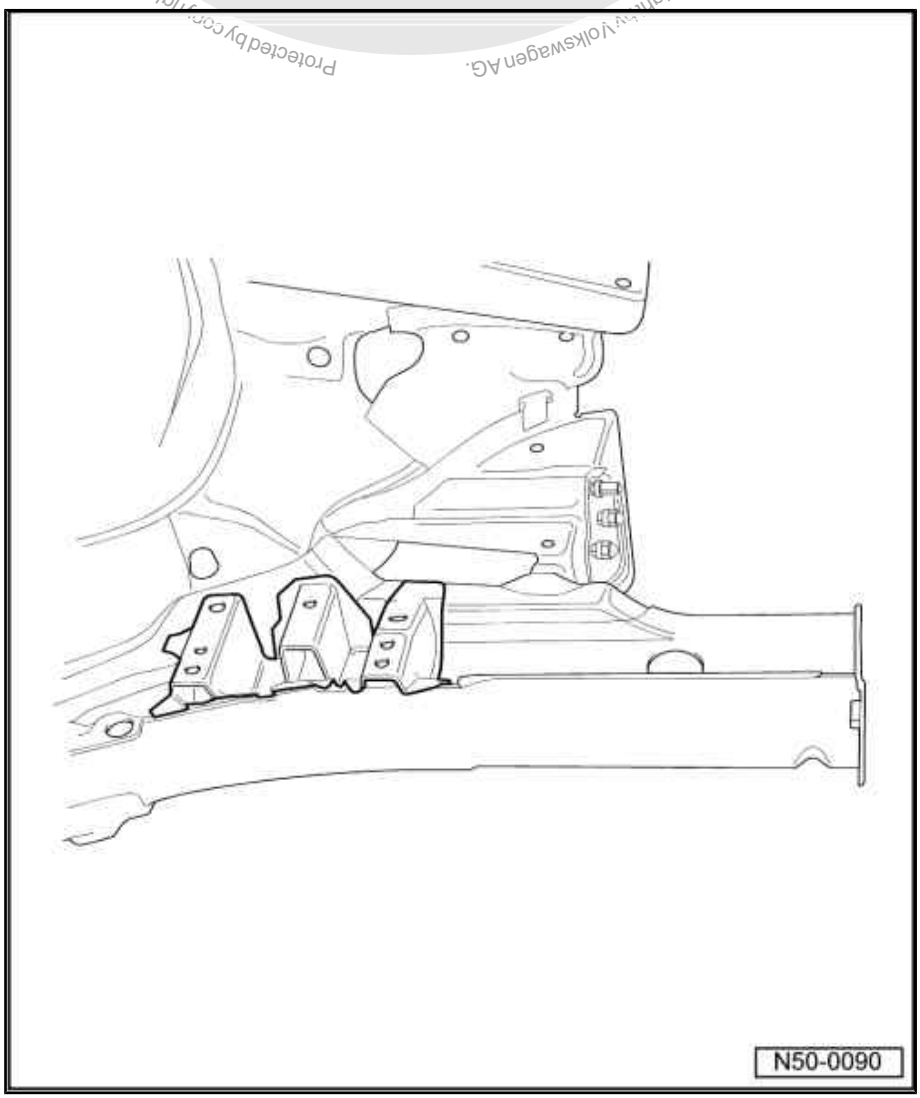

– Separate original joint.
– Remove remaining material.

satelettronica

1.1.2 Replacement part

- Mounting bracket

1.1.3 Welding in

Preparing new part

- Drill holes for SG plug weld seam (7 mm ∅).
- Secure vehicle and new part to alignment bracket.
- Weld in new part, SG plug weld seam.

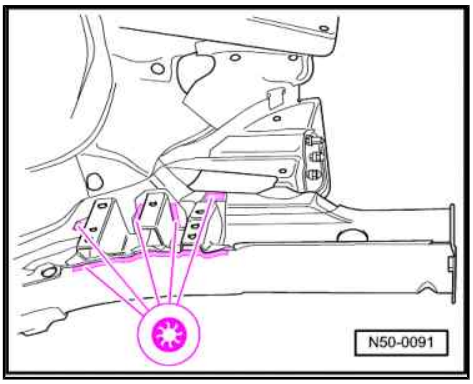

1.2 Right engine bracket

1.2.1 Cutting locations

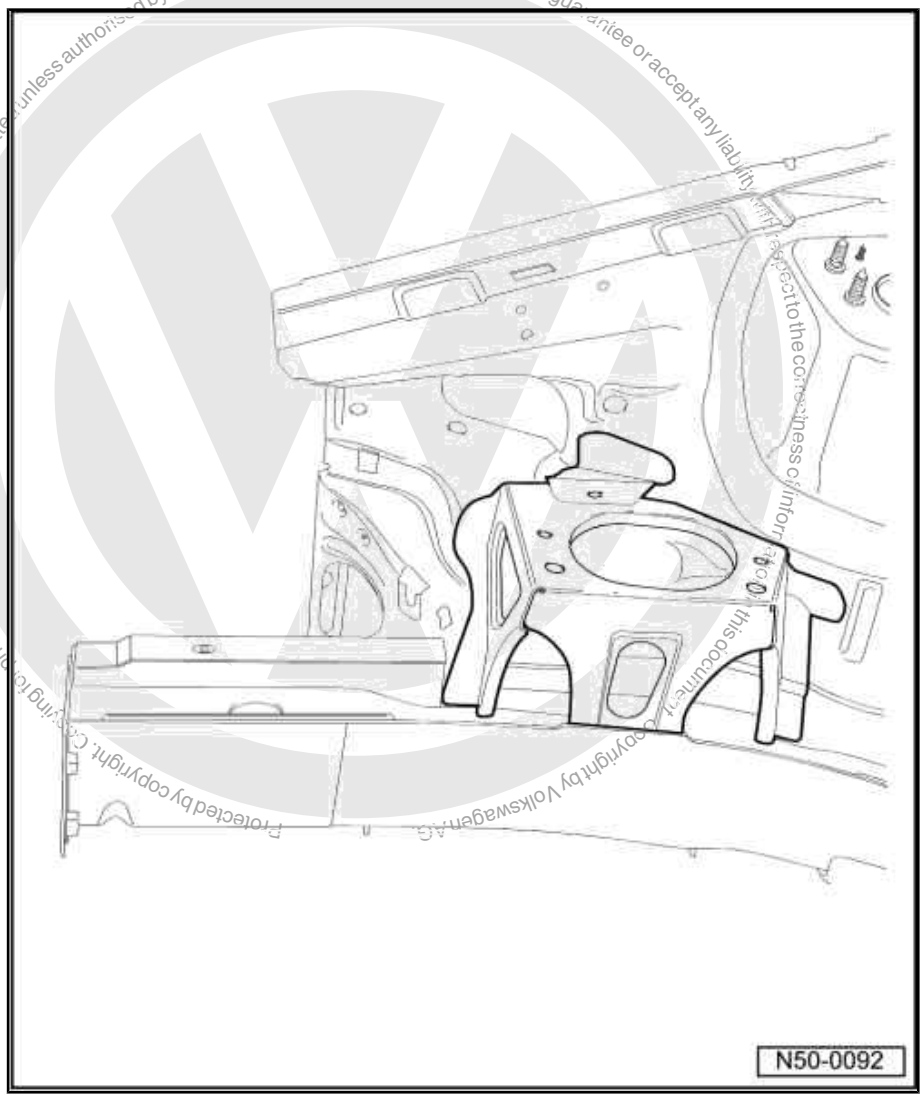

Protected by copyright. Copying for private or commercial purposes, in part or in whole, is not permitted unless authorised by Volkswagen AG. Volkswagen AG does not guarantee or accept any liability with respect to the correctness of information in this document. Copyright by Volkswagen AG.

satelettronica

– Separate original joint.
– Remove remaining material.

1.2.2 Replacement part

♦ Mounting bracket

1.2.3 Welding in

Preparing new part

– Drill holes for SG plug weld seam (7 mm ∅).
– Secure vehicle and new part to alignment bracket.
– Weld in new part, SG plug weld seam.
– Spot weld remaining joint in, RP spot weld seam.

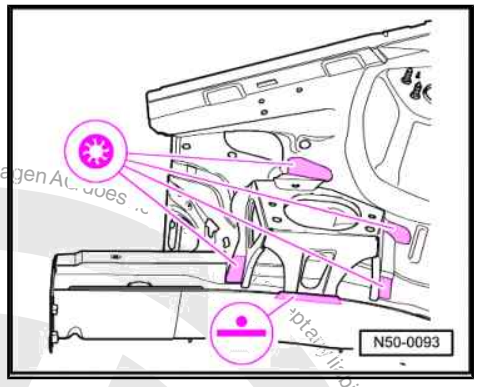

Protected by copyright. Copying for private or commercial purposes, in part or in whole, is not permitted unless authorised by Volkswagen AG. Volkswagen AG does not give any liability with respect to the correctness of information in this document. Copyright by Volkswagen AG.
satelettronica

RO: 50 41 55 50

2 Renewing support

WARNING

Observe safety notes!

⇒ General Information; Body Repairs, General Body Repairs ; Chapter 1 - Safety notes .

2.1 Removing

2.1.1 Cutting locations

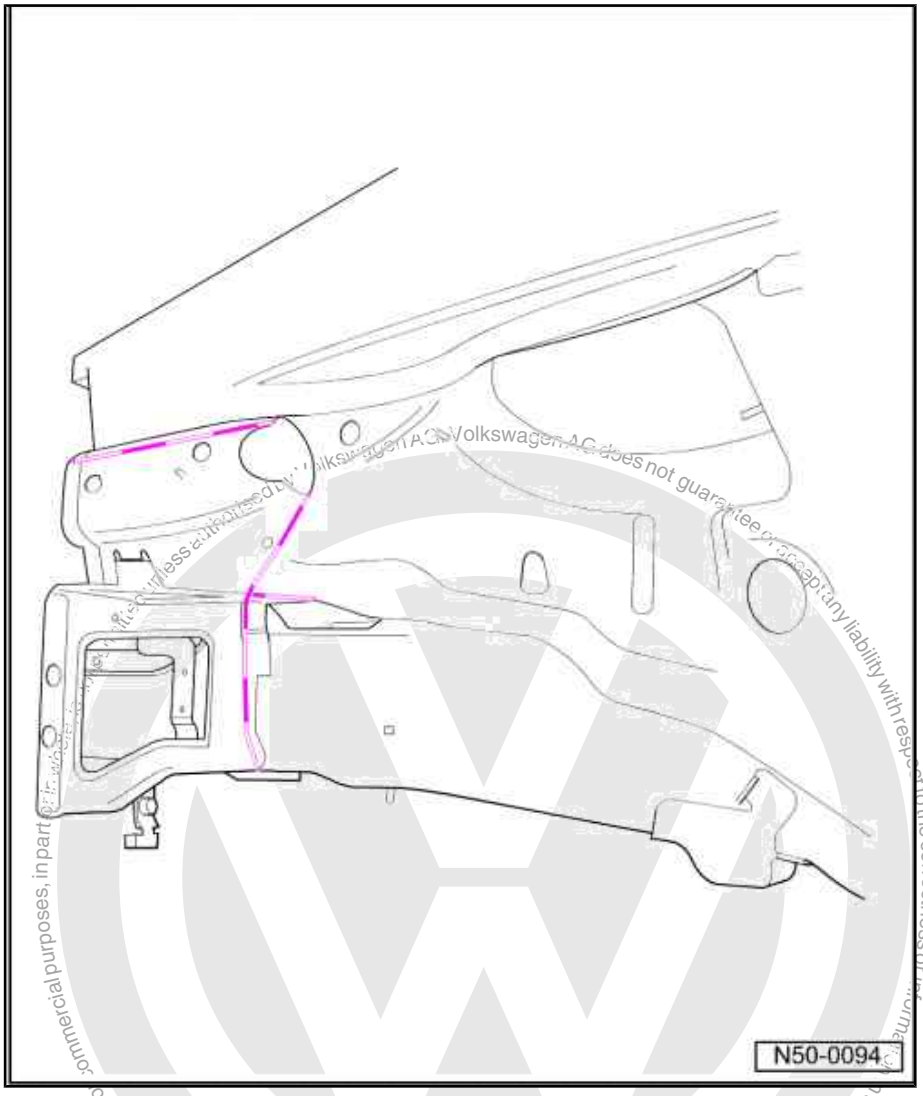

– Cut off support for bumper.
– Remove remaining material.

Protected by copyright. Copying for private or commercial purposes, in part or in whole, is not permitted unless authorised by Volkswagen AG. Volkswagen AG does not guarantee or accept any liability with respect to the correctness of this document. Copyright by Volkswagen AG.
satelettronica

2.1.2 Replacement parts

- Support (part designation: bracket)
- Cover plate for wheel housing

2.1.3 Welding in

Preparing new part

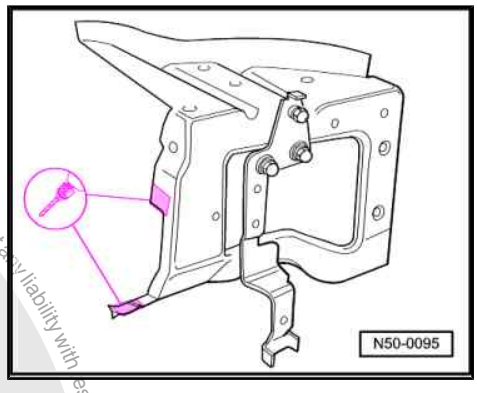

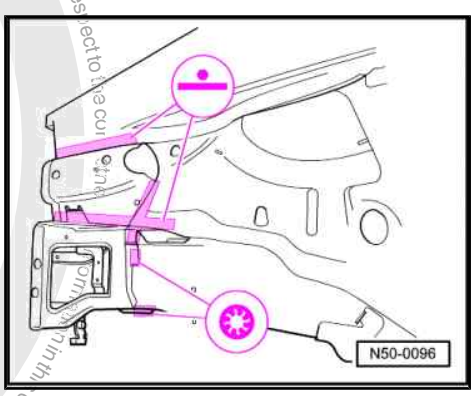

– Drill holes for SG plug weld seam (7 mm ∅).
– Adapt new part and fix in position.
– Weld in new part, RP spot weld seam.
– Weld in remaining joint, SG plug weld seam.

Protected by copyright. Copying for private or commercial purposes, in part or in whole, is not permitted unless authorised by Volkswagen AG. Volkswagen AG does not guarantee or accept any liability with respect to the correctness of information in this document. Copyright by Volkswagen AG.

satelettronica

RO: 50 74 55 52

3 Renewing front wheel housing

WARNING

Observe safety notes!

⇒ General Information; Body Repairs, General Body Repairs ; Chapter 1 - Safety notes .

3.1 Removing

Note

The upper wheel housing longitudinal member must always be renewed complete.

3.1.1 Cutting locations

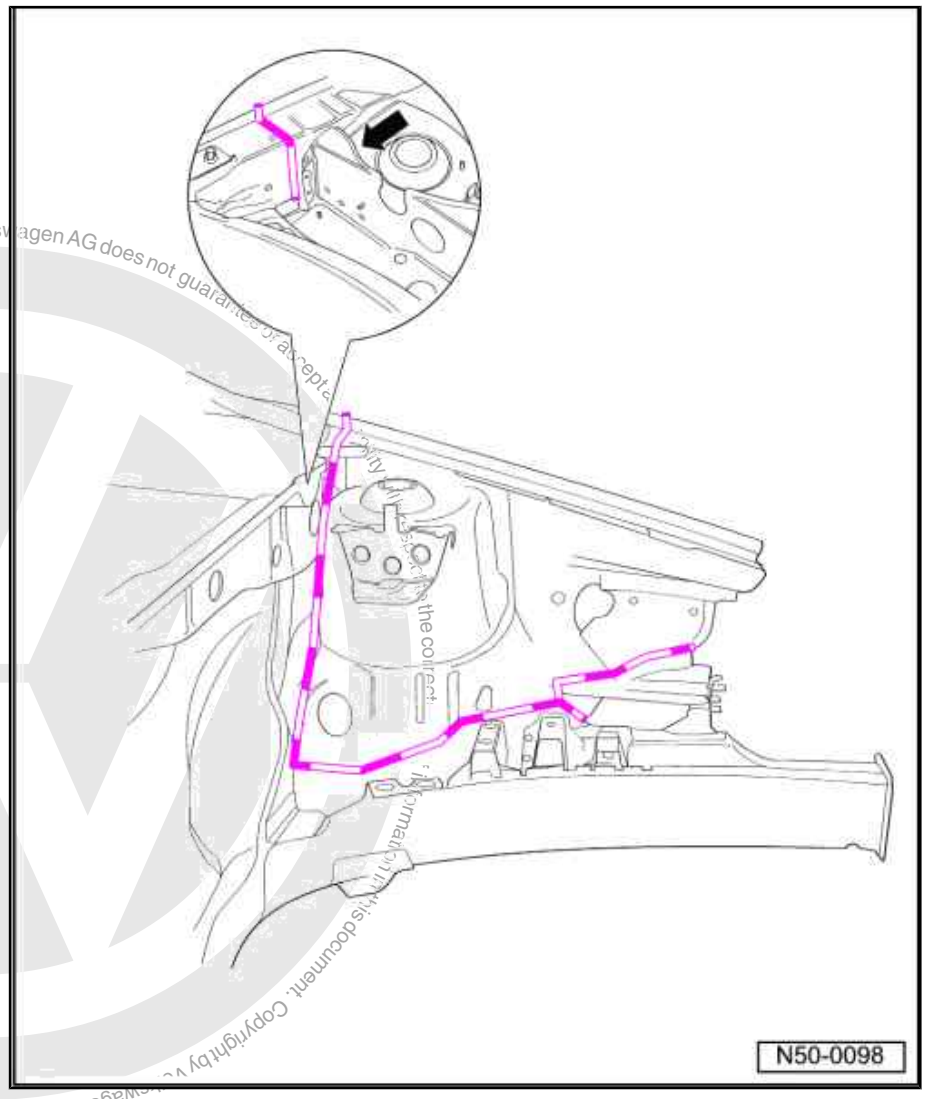

Protected by copyright. Copyright for private or commercial purposes, in part or in whole, is not permitted unless authorised by Volkswagen AG. Volkswagen AG does not guarantee or accept any liability with respect to the correctness of information in this document. Copyright by Volkswagen AG.
satelettronica

- Separate web plate -arrow- from suspension strut mounting and wheel housing.
- Bend web plate -arrow- towards windscreen.
- Position cutting line approx. 15 - 20 mm in front of bulkhead.
- Cut out wheel housing behind suspension strut mounting.
- Remove remaining material.

3.1.2 Replacement parts

Note

The wheel housing is supplied with no pre-drilled holes for the suspension strut mounting. The holes must be drilled with the aid of the alignment bracket set. The alignment bracket is used as a drill template.

- ♦ Front wheel housing
- ♦ Upper wheel housing longitudinal member

3.1.3 Welding in

Preparing new part

- Transfer parting cut to new part and cut out.
- Be sure to add approx. 10 mm for overlap in lower joint surface.
- Fix new part on alignment bracket.
- Before welding in, fit wing. When doing this, check width, length and diagonal dimensions.
- In parting zone, carry out offset overlap weld to both sides under square aperture, SG staggered continuous weld seam.

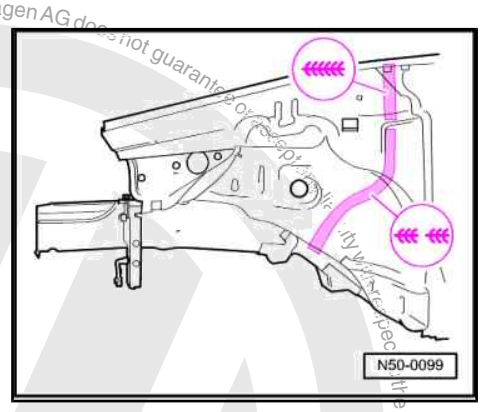

- In parting area, carry out butt weld above square aperture, SG continuous weld seam.
- Spot weld wheel housing to lower longitudinal member, RP spot weld seam.

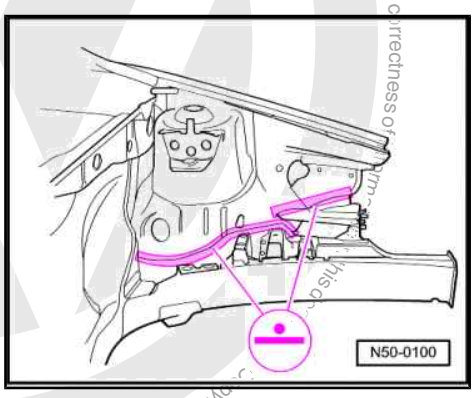

Protected by copyright. Copying for private or commercial purposes, in part or in whole, is not permitted unless authorised by Volkswagen AG. Volkswagen AG does not guarantee or accept any liability whatsoever in respect of the correctness of this copy.
Copyright by Volkswagen AG.
satelettronica

– Spot weld wheel housing to support for bumper, RP spot weld seam.

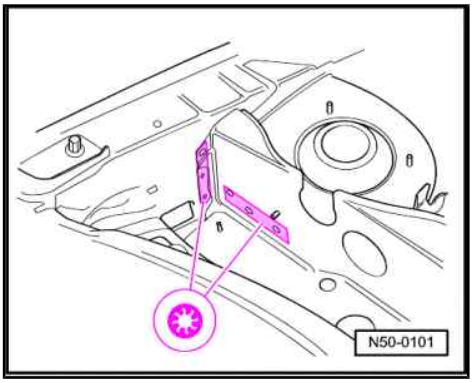

– Bend web plate back and weld in again, SG plug weld seam.
– Spot weld upper wheel housing longitudinal member, RP spot weld seam.
– Additionally weld in wheel housing in area of upper wheel housing longitudinal member, SG staggered continuous weld seam.
– Weld in remaining joint, SG plug weld seam.

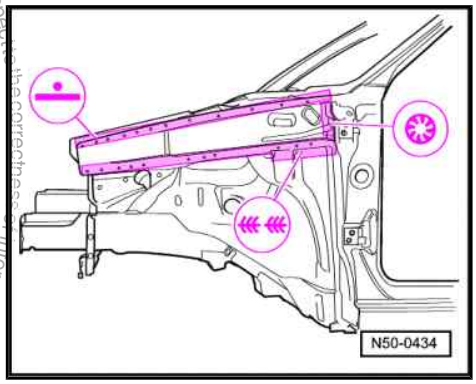

Protected by copyright. Copying for private or commercial purposes, in part or in whole, is not permitted unless authorised by Volkswagen AG. Volkswagen AG does not guarantee or accept any liability with respect to the correctness of information in this document. Copyright by Volkswagen AG.

satelettronica

RO: 50 75 55 50

4 Renewing front wheel housing - part section

WARNING

Observe safety notes!

⇒ General Information; Body Repairs, General Body Repairs ; Chapter 1 - Safety notes .

4.1 Removing

4.1.1 Cutting locations

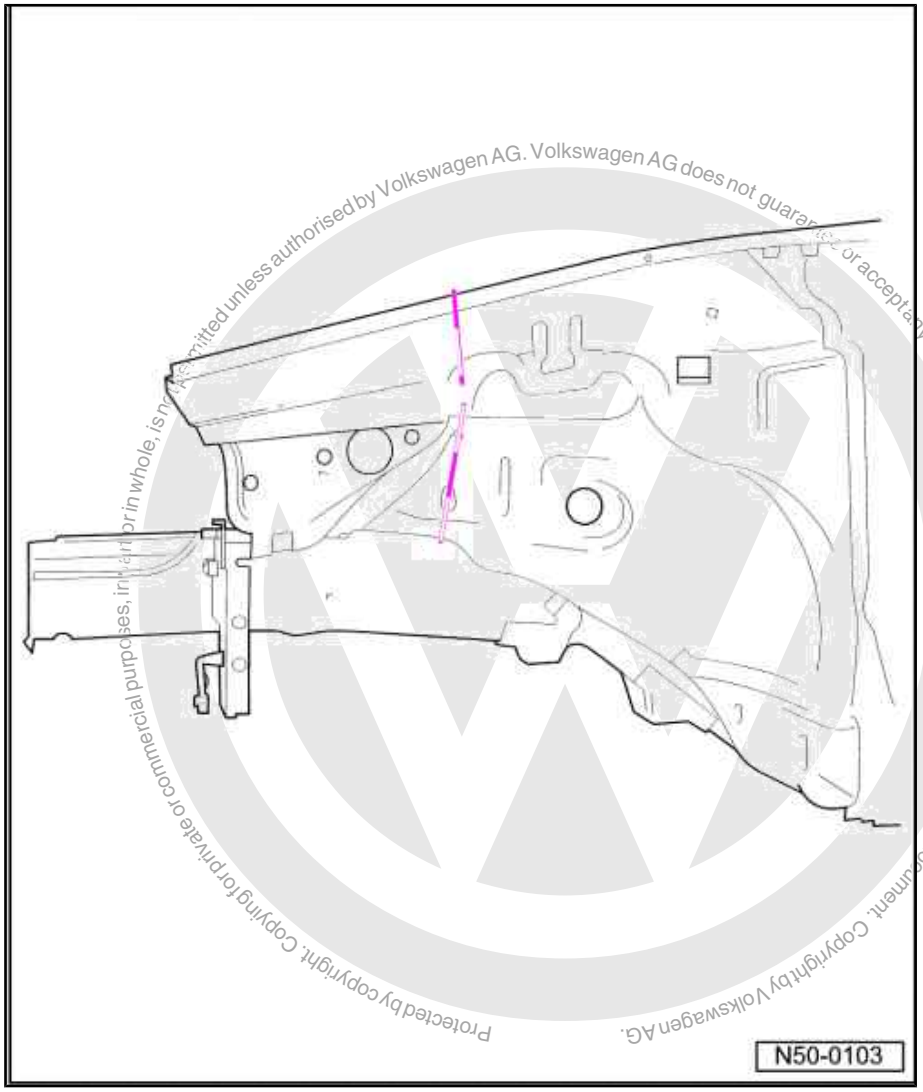

Protected by copyright. Copying for private or commercial purposes, in part or in whole, is not permitted unless authorised by Volkswagen AG. Volkswagen AG does not guarantee or accept any liability with respect to the correctness of information in this document. Copyright by Volkswagen AG.
satelettronica

– Cut wheel housing out in front of suspension strut mounting.
– Remove remaining material.

– Cut out upper wheel housing longitudinal member as required (50 mm offset to wheel housing parting cut).

4.1.2 Replacement parts

- Front wheel housing
- Upper wheel housing longitudinal member
- Cover plate for wheel housing

4.1.3 Welding in

Preparing new part

– Transfer parting cuts to new parts and cut out.

– Fix new part on alignment bracket.

– Before welding in, fit wing. When doing this, check width, length and diagonal dimensions.

– Butt weld parting zone, SG continuous weld seam.

– Weld in wheel housing at longitudinal member, RP spot weld seam.

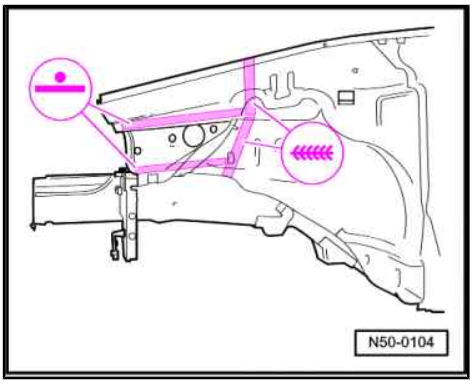

– Weld in cover plate, RP spot weld seam.

– Spot weld upper wheel housing longitudinal member, RP spot weld seam.

– Butt weld parting cut at upper wheel housing longitudinal member, SG continuous weld seam.

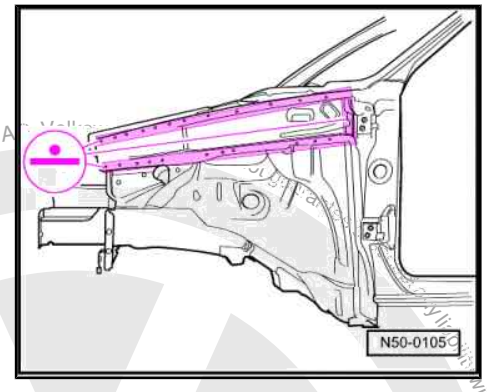

Protected by copyright. Copying for private or commercial purposes, in part or in whole, is not permitted unless authorised by Volkswagen AG. Copyright by Volkswagen AG. No liability with respect to the correctness of information in this document.
satelettronica

RO: 50 79 55 50

5 Renewing longitudinal member before subframe mounting - part section

WARNING

Observe safety notes!

⇒ General Information; Body Repairs, General Body Repairs ; Chapter 1 - Safety notes .

5.1 Removing

Note

- *If the extent of damage permits, the parting cut can also be moved towards the front.*
- *The parting cuts on the longitudinal member and cover plate must be offset by 5 cm.*

5.1.1 Cutting locations

Protected by copyright. Copying for private or commercial purposes, in part or in whole, is not permitted unless authorised by Volkswagen AG. Volkswagen AG does not guarantee or accept any liability with respect to the correctness of information in this document. Copyright by Volkswagen AG.

satelettronica

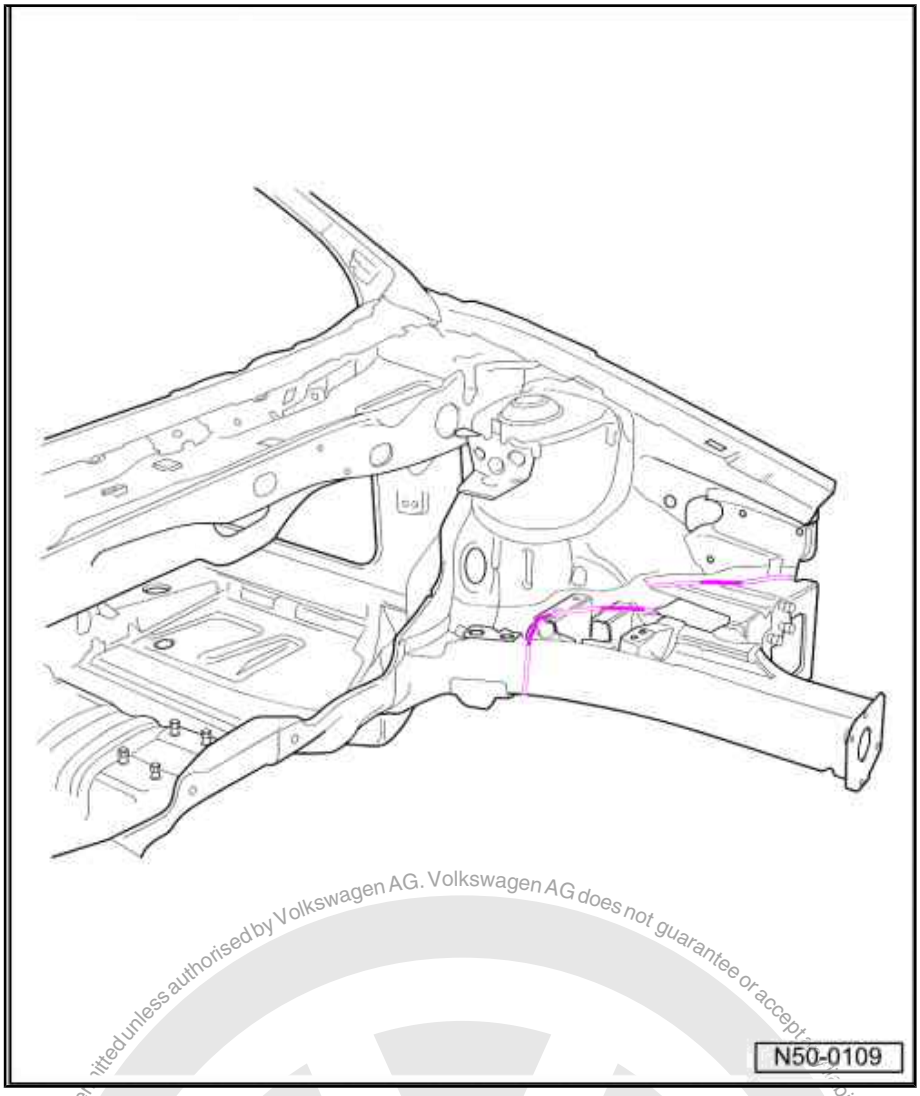

- Position cutting point in front of subframe mounting.
- Separate longitudinal member cover plate at hole above subframe mounting.
- Cut out longitudinal member.
- Remove remaining material.

5.1.2 Replacement part

♦ Longitudinal member with reinforcements and captive nuts

Protected by copyright. Copyright by Volkswagen AG.
Copyright for private or commercial purposes, in part or in whole, is not permitted unless authorised by Volkswagen AG. Volkswagen AG does not guarantee or accept any liability with respect to the correctness of information in this document.
satelettronica

5.1.3 Welding in

Preparing new part

– Transfer parting cut to new part and cut out.

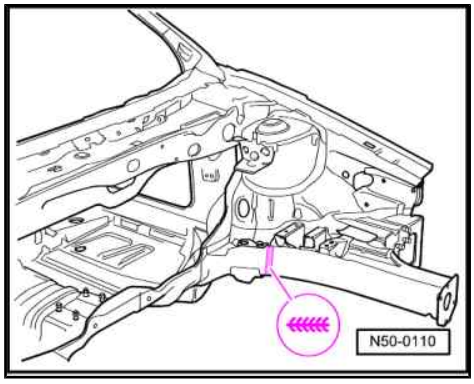

– Secure longitudinal member to alignment bracket and butt weld, SG continuous weld seam.
– Butt weld cutting point of cover plate, SG continuous weld seam.
– Weld in longitudinal member at wheel housing, RP spot weld seam.

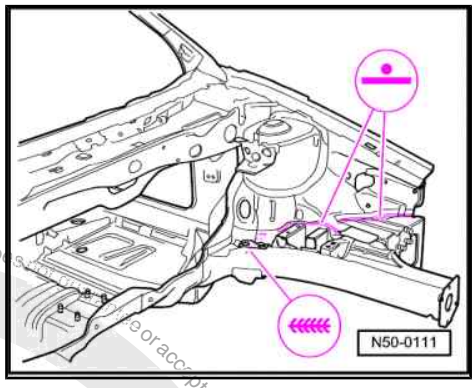

Protected by copyright. Copying for private or commercial purposes, in part or in whole, is not permitted unless authorised by Volkswagen AG. Volkswagen AG does not guarantee or accept any liability with respect to the correctness of information in this document. Copyright by Volkswagen AG.
satelettronica

RO: 50 79 55 50

6 Renewing longitudinal member behind subframe mounting - part section

WARNING

Observe safety notes!

⇒ General Information; Body Repairs, General Body Repairs ; Chapter 1 - Safety notes .

6.1 Removing

6.1.1 Cutting locations

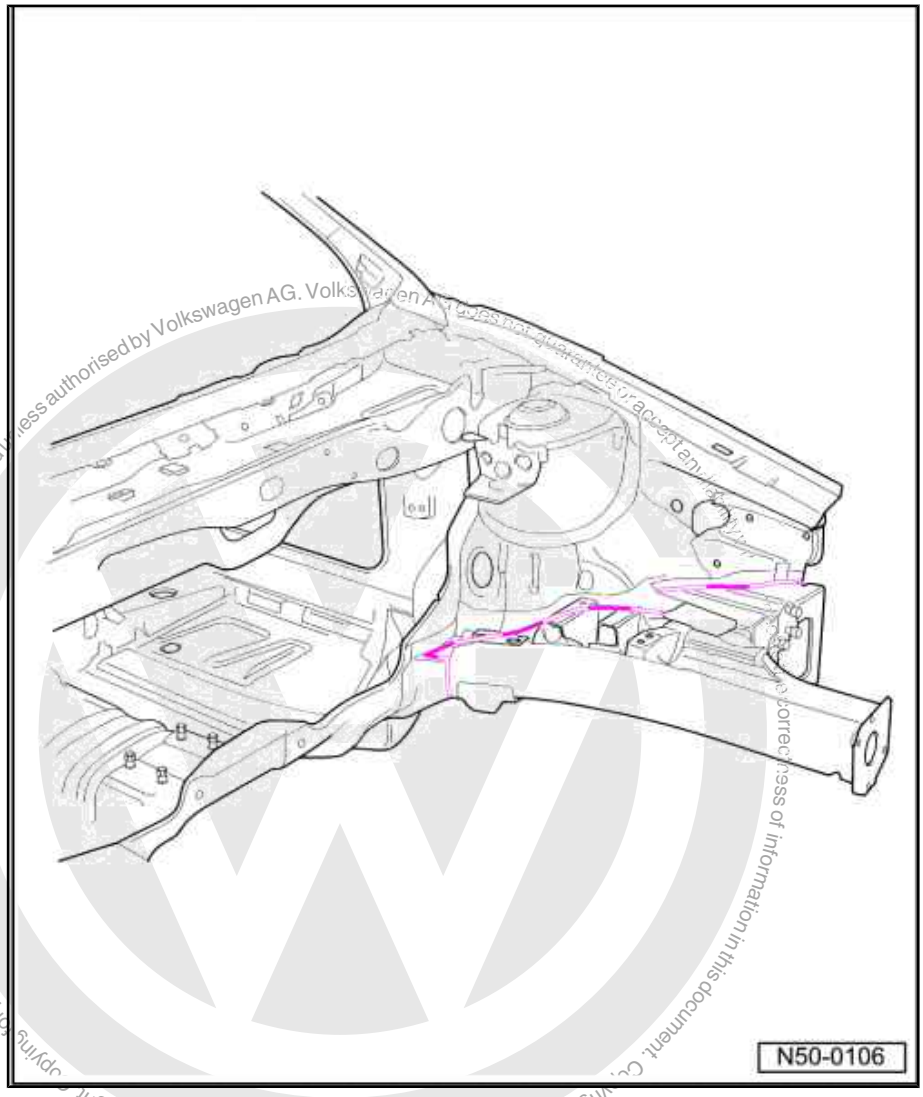

– Position cutting point behind subframe mounting.
– Separate original joint of longitudinal member cover plate.

satelettronica

– Cut out longitudinal member.
– Remove remaining material.

6.1.2 Replacement part

♦ Longitudinal member

6.1.3 Welding in

Preparing new part

– Transfer parting cut to new part and cut out.

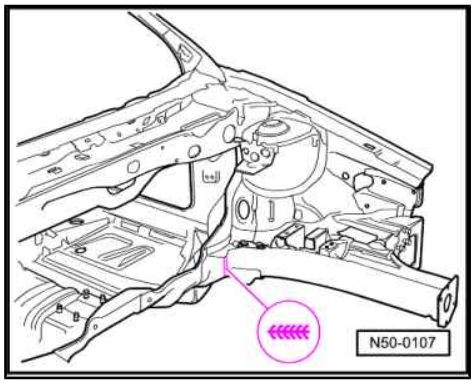

– Secure longitudinal member to alignment bracket and butt weld, SG continuous weld seam.
– Weld in longitudinal member at wheel housing, RP spot weld seam.
– Weld longitudinal member cover plate to bulkhead, SG plug weld seam.

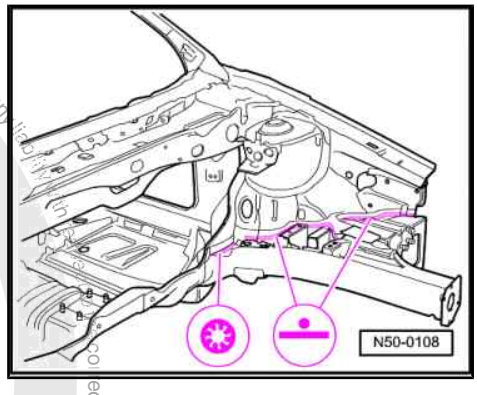

Protected by copyright. Copying for private or commercial purposes, in part or in whole, is not permitted unless authorised by Volkswagen AG. Volkswagen AG does not guarantee or accept any liability with respect to the correctness of information in this document. Copyright by Volkswagen AG.
satelettronica

RO: 50 80 55 00

7 Renewing front section of longitudinal member

WARNING

Observe safety notes!

⇒ General Information; Body Repairs, General Body Repairs ; Chapter 1 - Safety notes .

Note

The towing eye must be removed before the front section of the right-hand longitudinal member can be renewed.

7.1 Removing

7.1.1 Cutting locations

Protected by copyright. Copying for private or commercial purposes, in part or in whole, is not permitted unless authorised by Volkswagen AG. Volkswagen AG does not guarantee or accept any liability with respect to the correctness of information in this document. Copyright by Volkswagen AG.

satelettronica

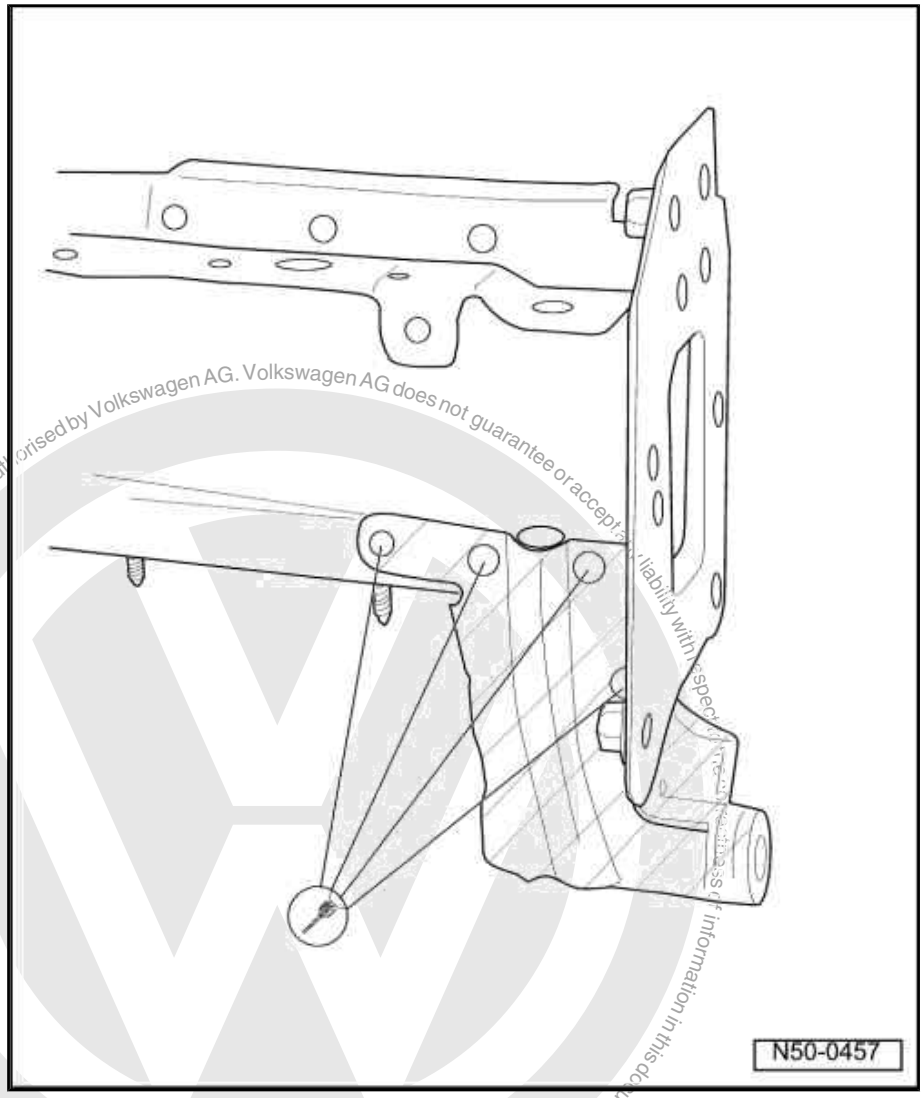

– Separate original joint.

Protected by copyright. Copying for private or commercial purposes, in part or in whole, is not permitted unless authorised by Volkswagen AG. Volkswagen AG does not guarantee or accept any liability with respect to the correctness of information in this document. Copyright by Volkswagen AG.

satelettronica

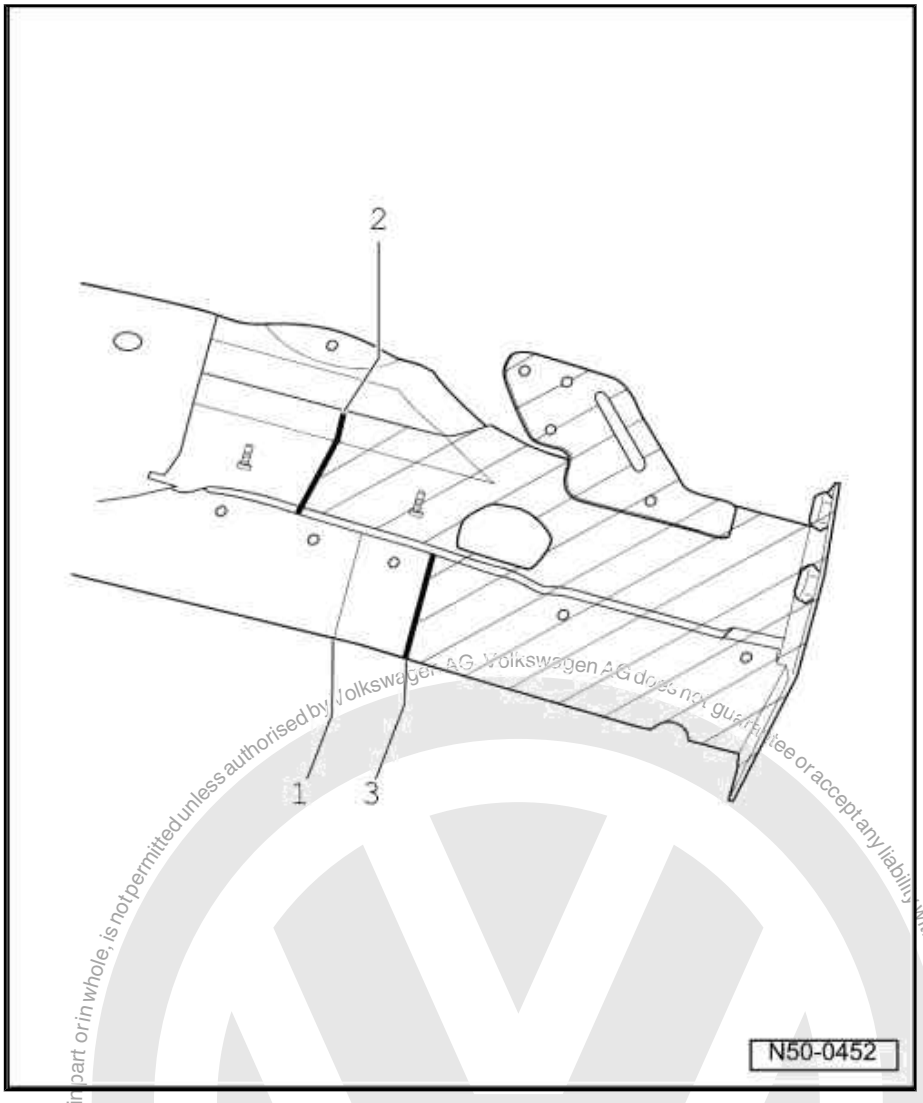

- For part section repair, carry out parting cut as follows:
- 1 = Weld seam (plate seam weld).
- 2 = Position parting cut for longitudinal member cover plate 30 mm behind weld seam (plate weld seam).
- 3 = Position parting cut for longitudinal member 30 mm in front of weld seam (plate weld seam).
- Remove remaining material.

7.1.2 Replacement parts

- Front section of longitudinal member
- Cover plate
- Sealing plate (part designation: cover plate)
- Towing eye (only right-hand side)

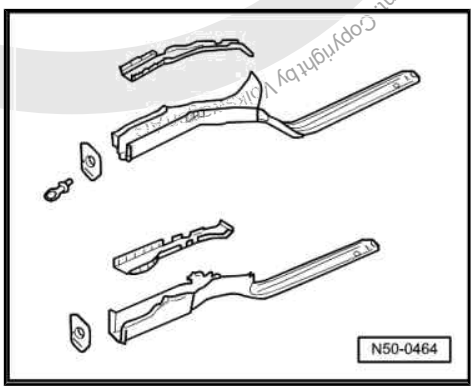

Protected by copyright. Copying for private or commercial purposes, in part or in whole, is not permitted unless authorised by Volkswagen AG. Volkswagen AG does not guarantee or accept any liability with respect to the correctness of information in this document.
satelettronica

7.1.3 Welding in

– Adapt new part to fit and secure on alignment bracket.

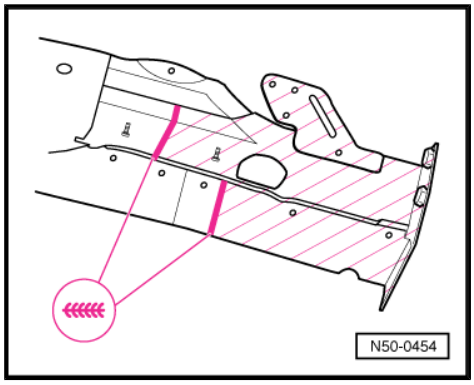

– Weld in front section of longitudinal member, SG continuous weld seam.
– Weld in towing eye, SG continuous weld seam.

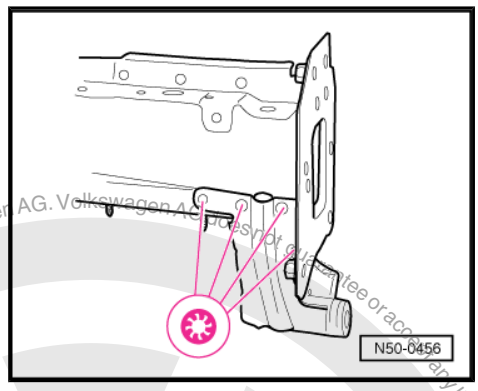

Protected by copyright. Copying for private or commercial purposes, in part or in whole, is not permitted unless authorised by Volkswagen AG. Volkswagen AG does not guarantee or accept any liability with respect to the correctness of information in this document. Copyright by Volkswagen AG.
satelettronica

51 – Body - centre

RO: 51 03 55 00

1 Renewing roof

WARNING

Observe safety notes!

⇒ General Information; Body Repairs, General Body Repairs ; Chapter 1 - Safety notes .

1.1 Removing

1.1.1 Cutting locations

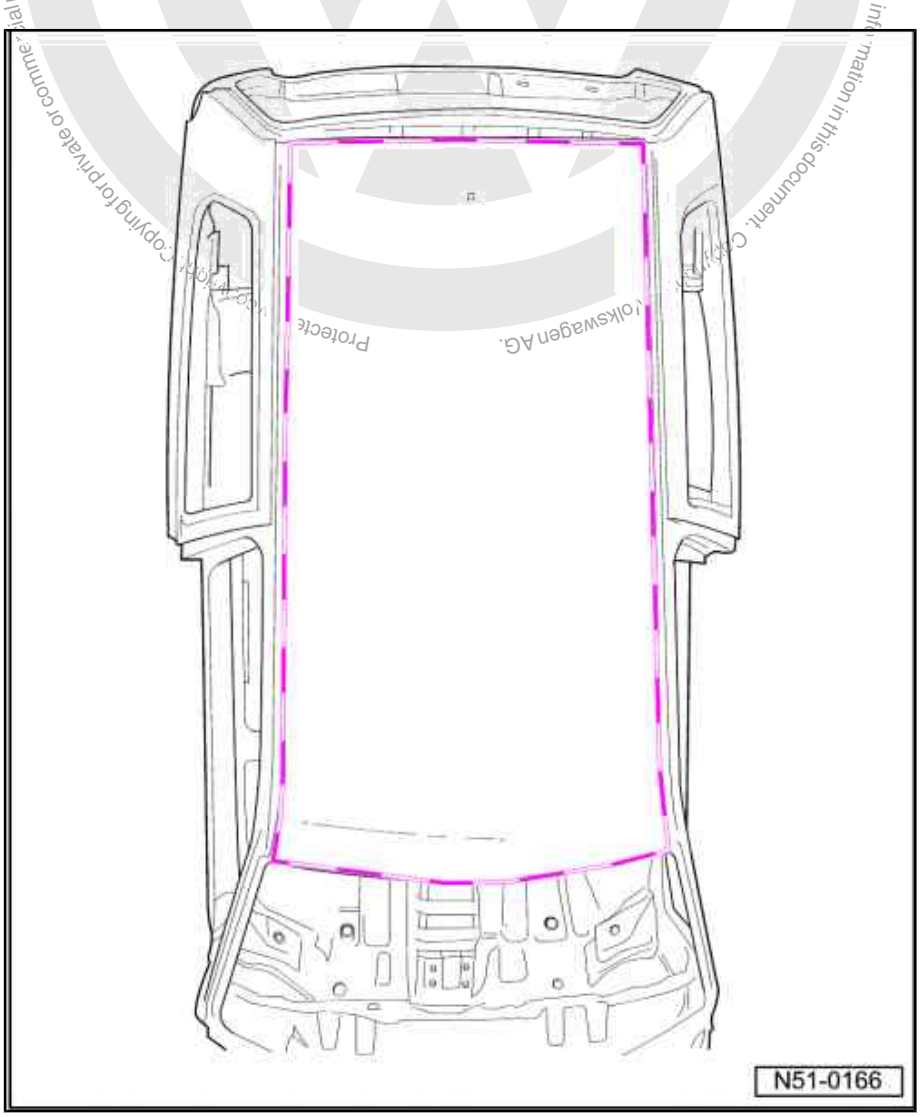

– Cut out roof.

– Remove remaining material.

Protected by copyright. Copying for private or commercial purposes, in part or in whole, is not permitted unless authorised by Volkswagen AG. Volkswagen AG does not guarantee or accept any liability with respect to the correctness of information in this document. Copyright by Volkswagen AG.
satelettronica

1.1.2 Replacement part

- Roof

1.1.3 Welding in

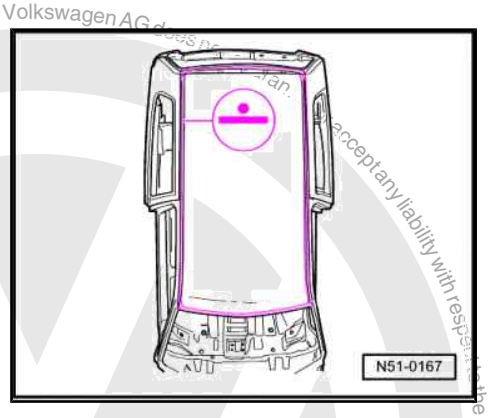

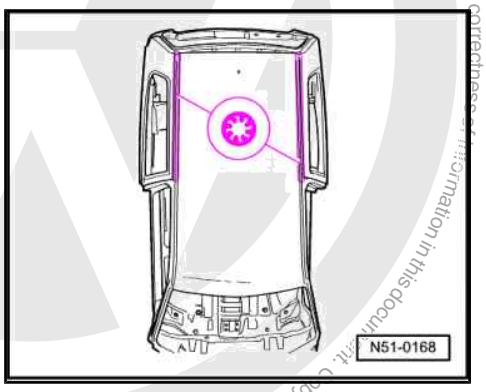

– Weld in roof, RP spot weld seam.
– If rear area is inaccessible due to installed side windows, SG plug weld seam.

Protected by copyright. Copying for private or commercial purposes, in part or in whole, is not permitted unless authorised by Volkswagen AG. Volkswagen AG does not accept any liability with respect to the correctness of information in this document. Copyright by Volkswagen AG.

satelettronica

RO: 51 07 55 50

2 Renewing front roof cross member

WARNING

Observe safety notes!

⇒ General Information; Body Repairs, General Body Repairs ; Chapter 1 - Safety notes .

2.1 Removing

2.1.1 Cutting locations

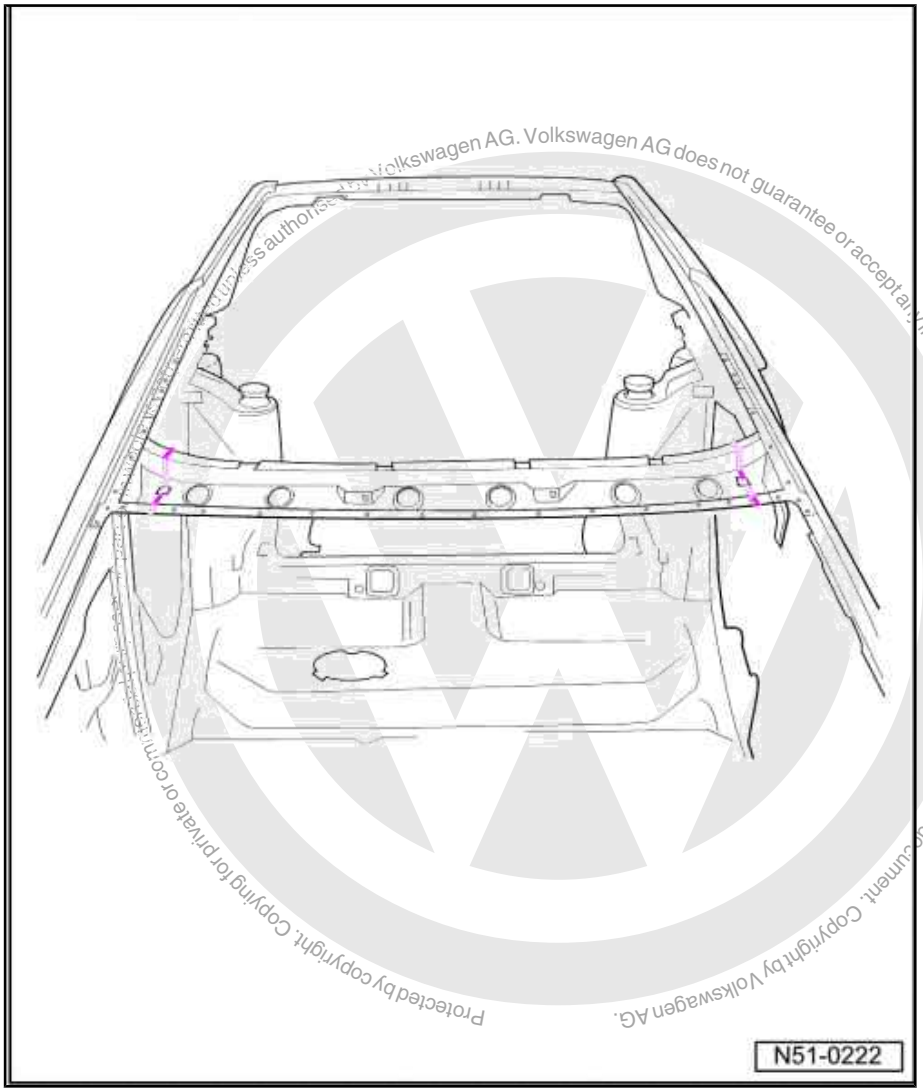

– Cut out cross member.
– Remove remaining material.

Protected by copyright. Copying for private or commercial purposes, in part or in whole, is not permitted unless authorised by Volkswagen AG. Volkswagen AG does not guarantee or accept any liability with respect to the correctness of information in this document. Copyright by Volkswagen AG.
satelettronica

2.1.2 Replacement part

- Roof cross member

2.1.3 Welding in

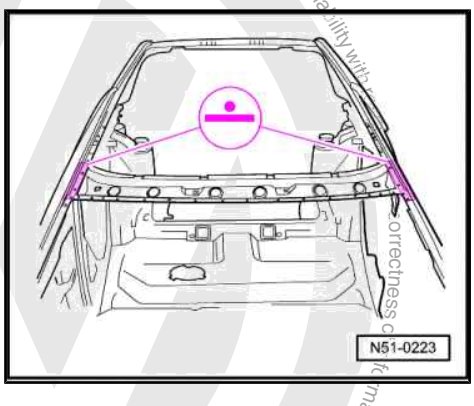

– Adapt new part to fit and fix in position.
– Weld in new part, RP spot weld seam.
– Weld in roof ⇒ page 50

Protected by copyright. Copying for private or commercial purposes, in part or in whole, is not permitted unless authorised by Volkswagen AG. Volkswagen AG does not guarantee or accept any liability with respect to the correctness of information in this document. Copyright by Volkswagen AG.
satelettronica

RO: 51 09 55 50

3 Renewing rear cross member

WARNING

Observe safety notes!

⇒ General Information; Body Repairs, General Body Repairs ; Chapter 1 - Safety notes .

3.1 Removing

3.1.1 Cutting locations

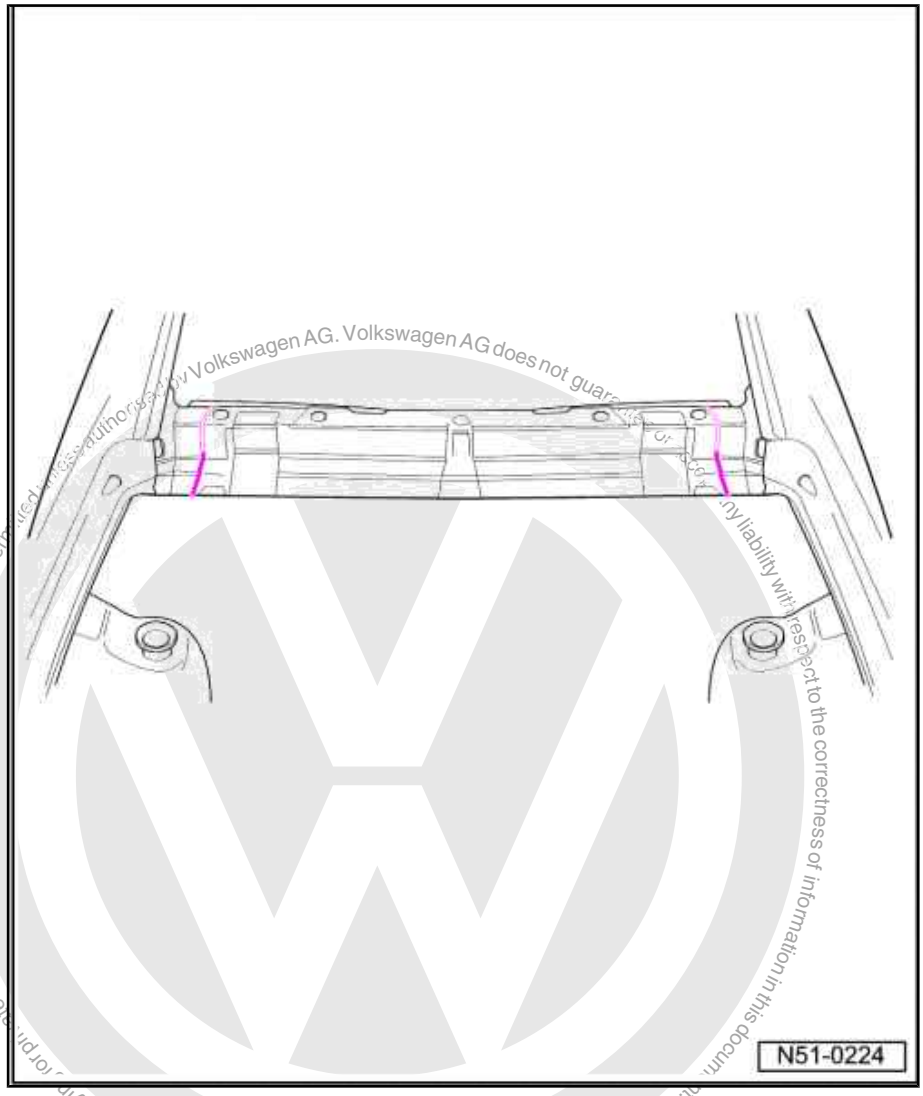

– Cut out cross member.
– Remove remaining material.

satelettronica

3.1.2 Replacement part

- Roof cross member

3.1.3 Welding in

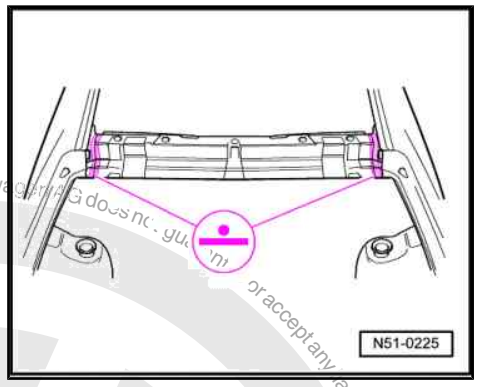

– Adapt new part to fit and fix in position.
– Weld in new part, RP spot weld seam.
– Weld in roof ⇒ page 50 .

Protected by copyright. Copying for private or commercial purposes, in part or in whole, is not permitted unless authorised by Volkswagen AG. Volkswagen AG does not give any guarantee or accept any liability with respect to the correctness of information in this document. Copyright by Volkswagen AG.

satelettronica

RO: 51 27 55 00

4 Renewing outer side panel - part section (2-door)

WARNING

Observe safety notes!

⇒ General Information; Body Repairs, General Body Repairs ; Chapter 1 - Safety notes .

4.1 Removing

Note

Make parting cut above wheel housing with pneumatic sabre saw -V.A.G 1523- .

4.1.1 Cutting locations

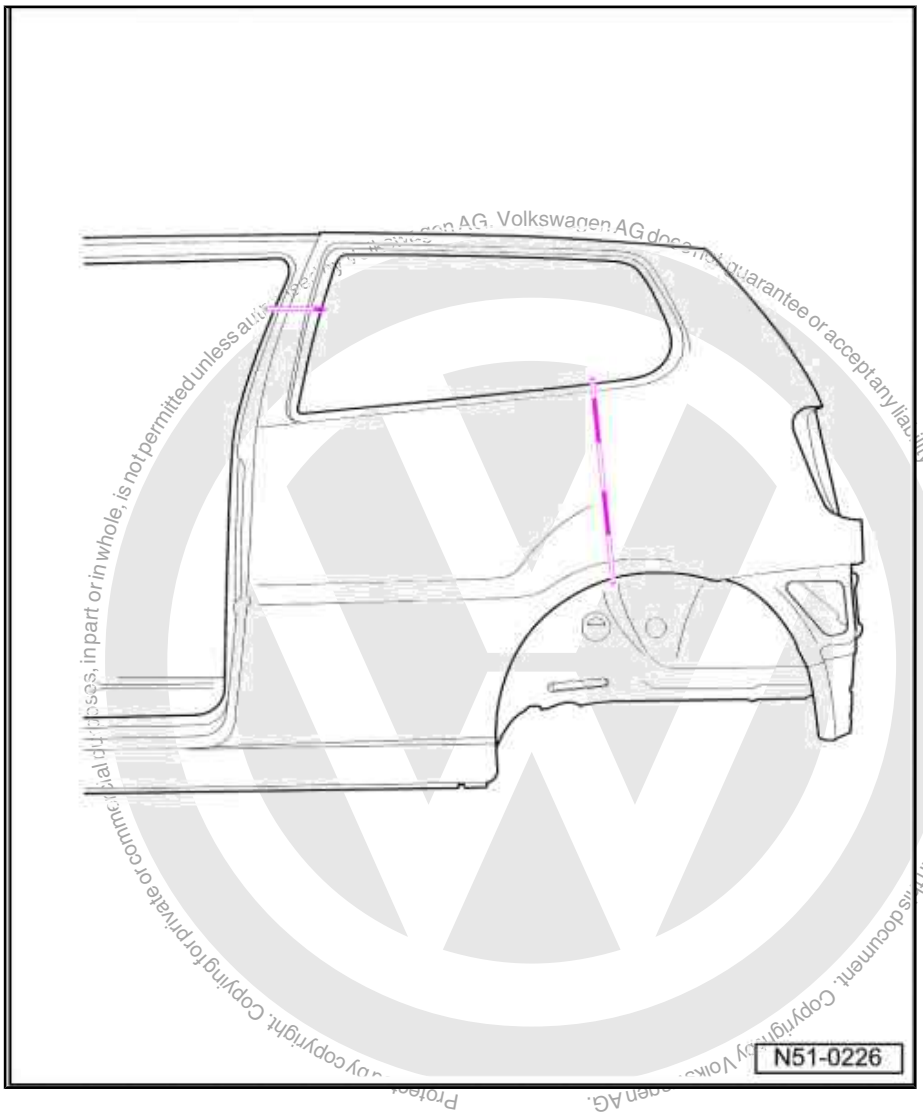

satelettronica

– Locate parting cut on each B-pillar according to extent of damage.
– Cut out side panel.
– When cutting out side panel, take care not to damage internal reinforcement in B-pillar.
– Separate original joint.
– Remove remaining material.

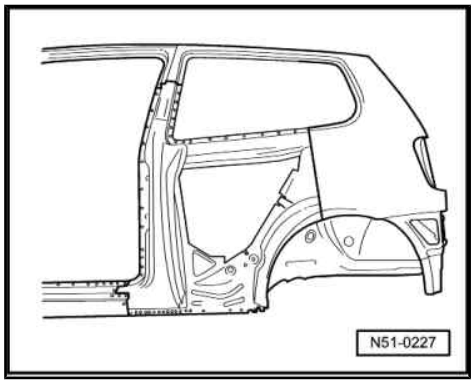

4.1.2 Replacement part

♦ Side panel

4.1.3 Welding in

Preparing new part

– Transfer parting cut to new part and remove shaded area.

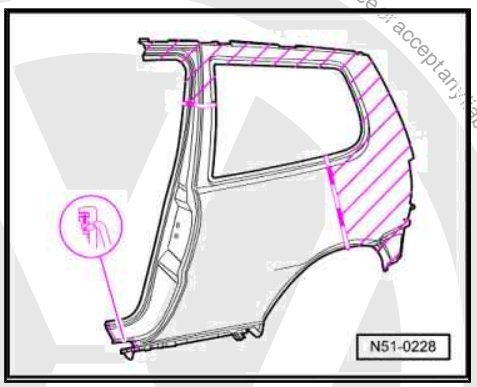

– Make holes in outer joint surface of new part.
– Adapt side member to fit with vehicle free of tension
– Before welding in, check gaps to adjacent parts.
– Place backing material behind parting cuts.
– Weld in side panel, RP spot weld seam.

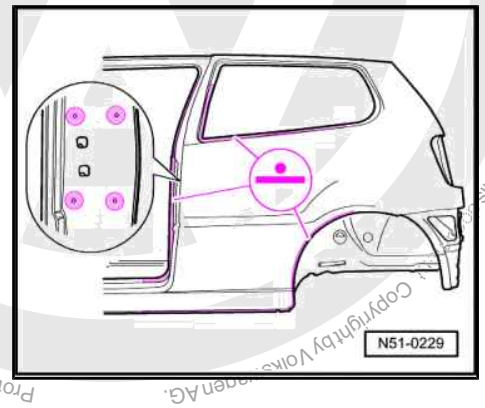

Protected by copyright. Copying for private or commercial purposes, in part or in whole, is not permitted unless authorised by Volkswagen AG. Volkswagen AG does not guarantee or accept any liability with respect to the correctness of information in this
Copyright by Volkswagen AG.
satelettronica

- Weld in B-pillar reinforcing for striker pin, RP spot weld seam.
- Weld in side panel, SG plug weld seam.
- Weld in parting cuts, SG stepped weld seam.
- Reform wheel housing flange ⇒ page 102 .

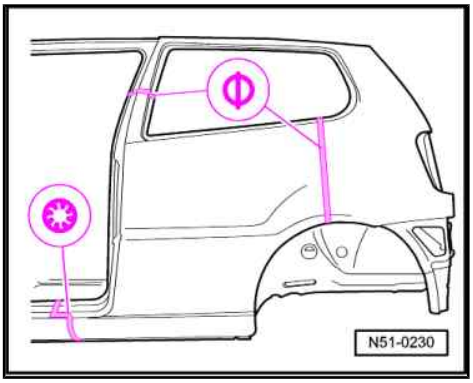

Protected by copyright. Copying for private or commercial purposes, in part or in whole, is not permitted unless authorised by Volkswagen AG. Volkswagen AG does not guarantee or accept any liability with respect to the correctness of information in this document. Copyright by Volkswagen AG.

satelettronica

RO: 51 27 55 04

5 Renewing outer side panel - part section (4-door)

WARNING

Observe safety notes!

⇒ General Information; Body Repairs, General Body Repairs ; Chapter 1 - Safety notes .

5.1 Removing

5.1.1 Cutting locations

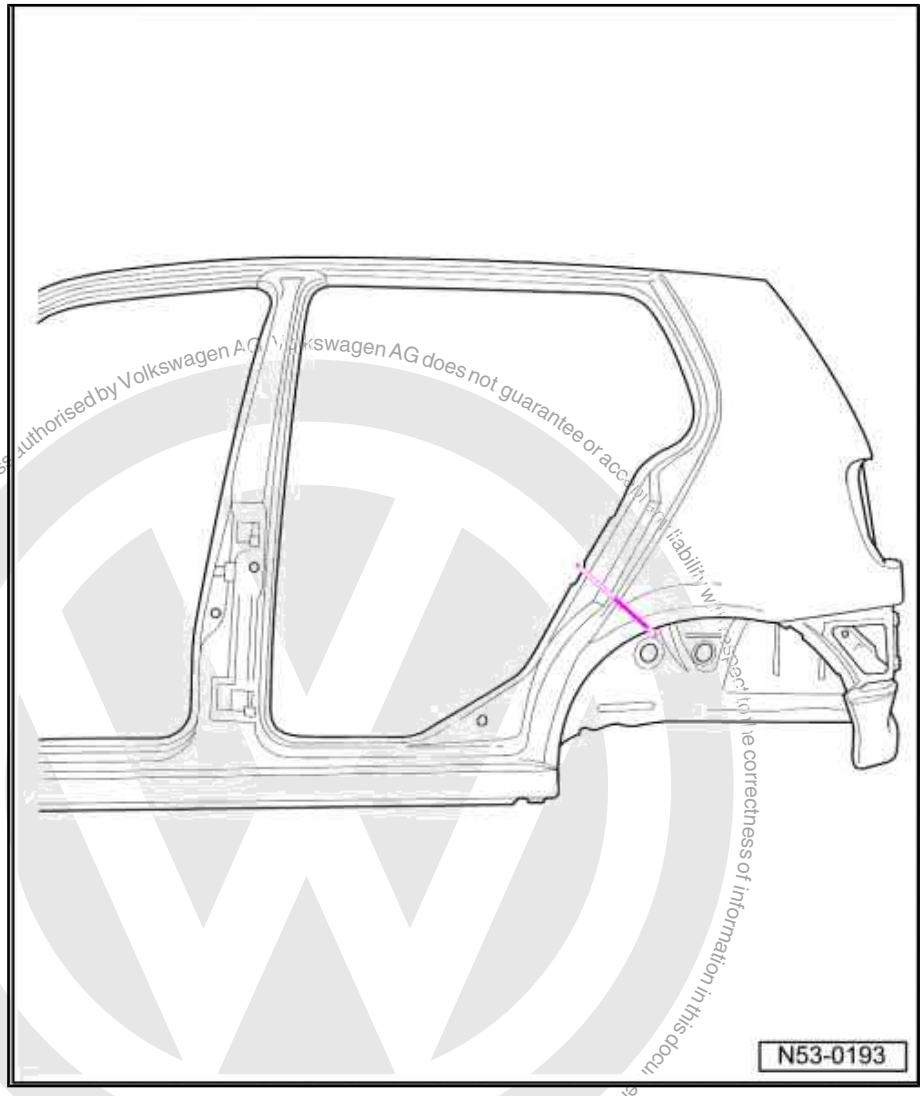

Protected by copyright. Copyright by Volkswagen AG.
Volkswagen AG does not guarantee or accept any liability with respect to the correctness of information in this document. Copyright by Volkswagen AG.
Copying for private or commercial purposes, in part or in whole, is not permitted unless authorised by Volkswagen AG.
satelettronica

– Locate parting cut below C-pillar reinforcing for striker pin according to degree of damage.
– Separate original joint.

5.1.2 Replacement part

- Side panel

5.1.3 Welding in

Preparing new part

- Transfer parting cut to new part and remove shaded area.
- Make holes in outer joint surface of new part.
- Adapt side member to fit with vehicle free of tension

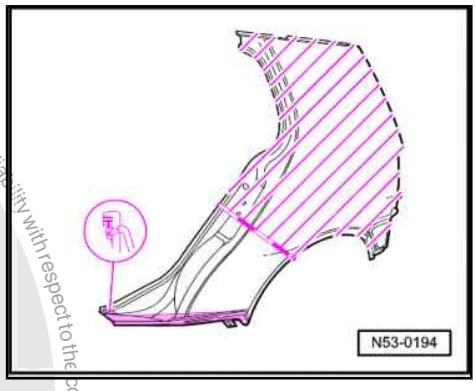

- Check shut lines to door.
- Place backing material behind parting cut.
- Butt weld parting cut, SG continuous weld seam.
- Weld in side panel, RP spot weld seam.
- Weld in remaining joint, SG plug weld seam.
- Reform wheel housing flange ⇒ page 114 .

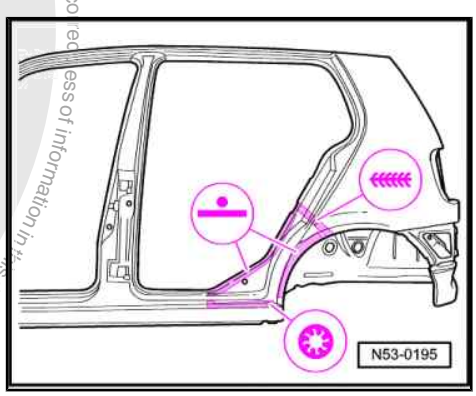

Protected by copyright. Copying for private or commercial purposes, in part or in whole, is not permitted unless authorised by Volkswagen AG. Volkswagen AG does not guarantee or accept any liability with respect to the correctness of information in this document. Copyright by Volkswagen AG.
satelettronica

RO: 51 37 55 00

6 Renewing A-pillar - part section

WARNING

Welding, parting using spark generating machines/tools or tinning in foam treated areas creates gases which are hazardous to health and environment. Therefore, refrain from using these processes.

Use 2-component - component filler material to smooth out irregularities.

Observe safety notes!

⇒ General Information; Body Repairs, General Body Repairs ; Chapter 1 - Safety notes .

6.1 Removing

Note

- *The A-pillar is foam treated below the door retaining strap for acoustic reasons.*
- *Only use pneumatic sabre saw -V.A.G 1523- or compressed air driven hammer -V.A.G 1577- for parting cut!*

6.1.1 Cutting locations

Protected by copyright. Copying for private or commercial purposes, in part or in whole, is not permitted unless authorised by Volkswagen AG. Volkswagen AG does not guarantee or accept any liability with respect to the correctness of information in this document. Copyright by Volkswagen AG.

satelettronica

Protected by copyright. Copying for private or commercial purposes, in part or in whole, is not permitted unless authorised by Volkswagen AG. Volkswagen AG does not guarantee or accept any liability with respect to the correctness of information.
Copyright by Volkswagen AG.

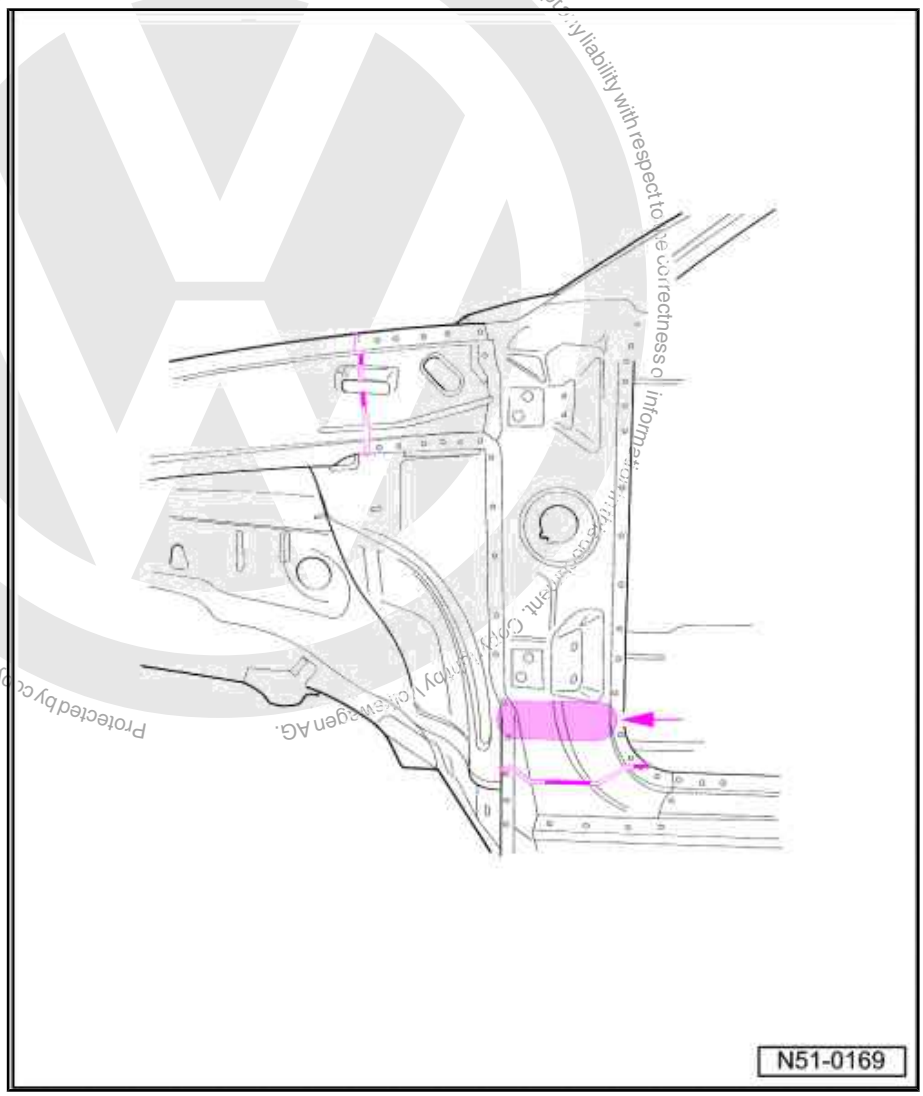

- Locate parting cut on upper wheel housing longitudinal member according to degree of damage.
- Foam treated area -arrows-.
- Scrape out as much remaining foam as possible before starting grinding work.
- Make lower parting cut above side member.

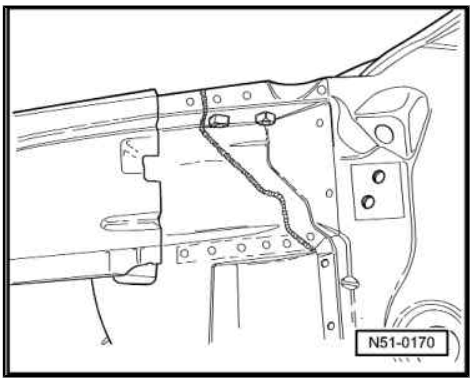

satelettronica

– Cut out upper wheel housing longitudinal member.
– Cut out A-pillar.
– Remove remaining material.

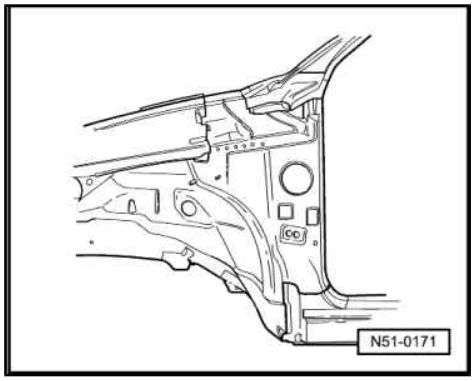

6.1.2 Replacement parts

- Upper wheel housing longitudinal member
- Outer A-pillar.
- 2-component foam filler, Part No. D 000 111 A2

6.1.3 Welding in

Preparing new parts

– Transfer parting cuts to new parts and cut away shaded area.

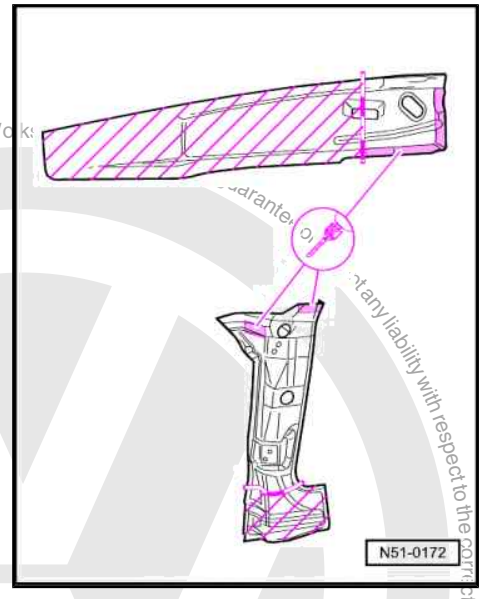

– Drill holes for SG plug weld seam (7 mm ∅).
– Adapt A-pillar to fit with vehicle stress free.
– Check exactness of fit with wing and door fitted.

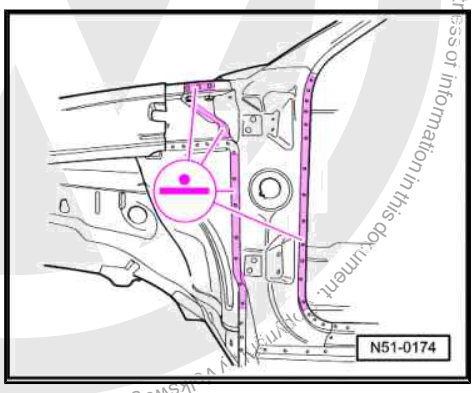

Protected by copyright. Copying for private or commercial purposes, in part or in whole, is not permitted unless authorised by Volkswagen AG. Volkswagen AG does not guarantee or accept any liability with respect to the correctness or information in this document.
satelettronica

– Weld in A-pillar, RP spot weld seam.
– Weld in A-pillar, SG plug weld seam.

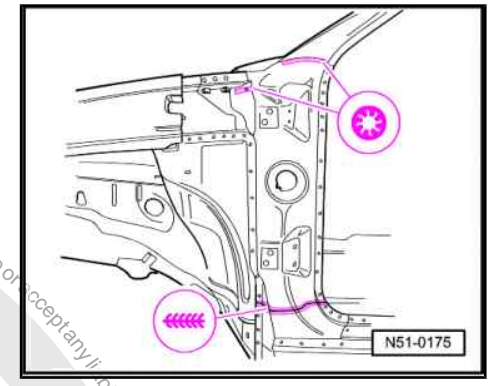

– Butt weld parting cut, SG continuous weld seam.
– Spot weld upper wheel housing longitudinal member, RP spot weld seam.
– Weld in parting cut, SG stepped weld seam.
– Weld in remaining joint, SG plug weld seam.

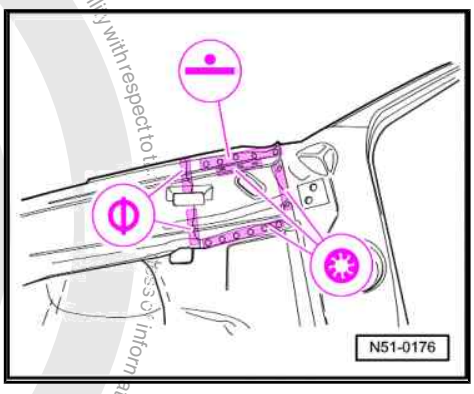

6.1.4 Foam insulation

Note

Before using foam read instructions for use.

– Install door retaining strap.
– After painting, treat cavity and allow approx. 10 minutes airing time.
– Mask off four-cornered holes.
– Foam treat area through hole -arrow-.
– Remove foam residue immediately with adhesive remover D 002 000 10.
– If the foam protrudes above the lower edge of the hole -arrow-, wait approx. 5 minutes after filling and cut out foam with a sharp knife.
– Then carry out cavity protection again to seal pores.

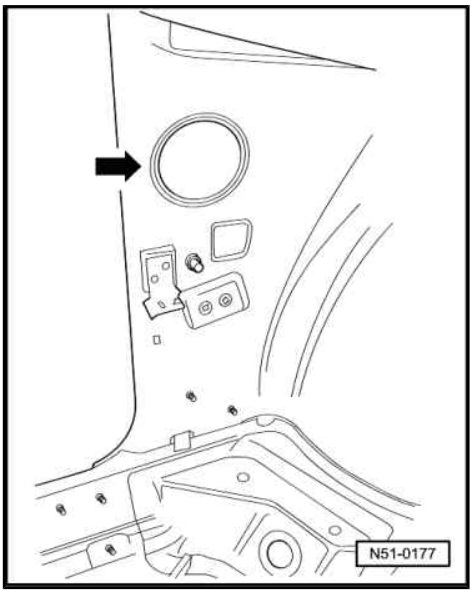

Protected by copyright. Copyright by Volkswagen AG.
Volkswagen AG does not guarantee or accept any liability with respect to the correctness of information in this document. Copyright by Volkswagen AG.
Copying for private or commercial purposes, in part or in whole, is not permitted unless authorised by Volkswagen AG.
satelettronica

RO: 51 41 55 50

7 Renewing B-pillar - part section (2-door)

WARNING

Observe safety notes!

⇒ General Information; Body Repairs, General Body Repairs ; Chapter 1 - Safety notes .

7.1 Removing

7.1.1 Cutting locations

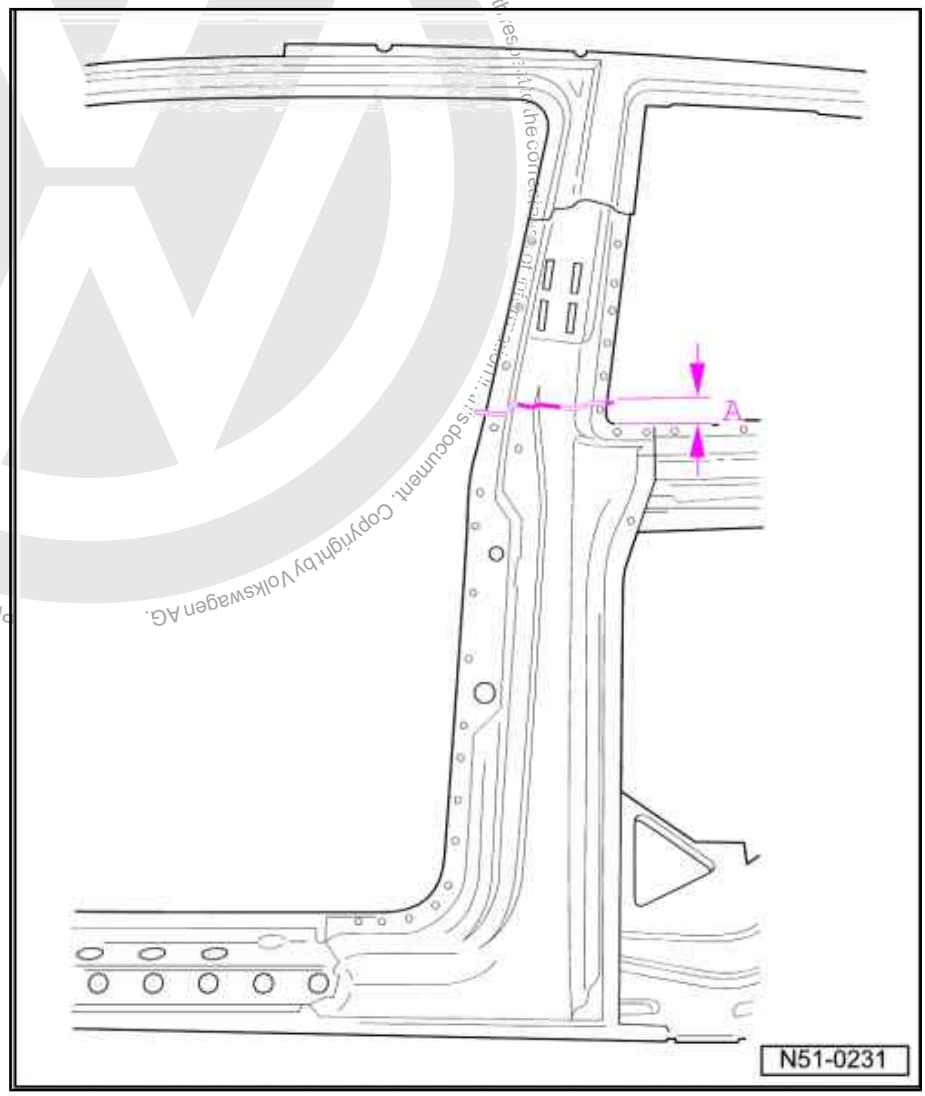

– Position parting cut for B-pillar below reinforcing plate.
– Dimension A = 20 mm.

satelettronica

– Drill out original joint of B-pillar.
– Remove remaining material.

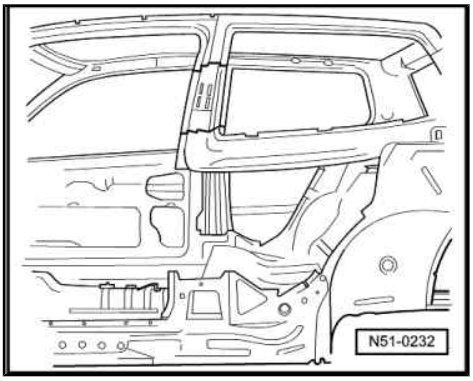

7.1.2 Replacement part

♦ B-pillar

7.1.3 Welding in

Preparing new part

– Transfer parting cut to new part and cut out.
– Adapt B-pillar to fit with vehicle free of tension.
– Check precision of fit with door and side panel fitted.
– Butt weld parting cut, SG continuous weld seam.
– Spot weld B-pillar, RP spot weld seam.

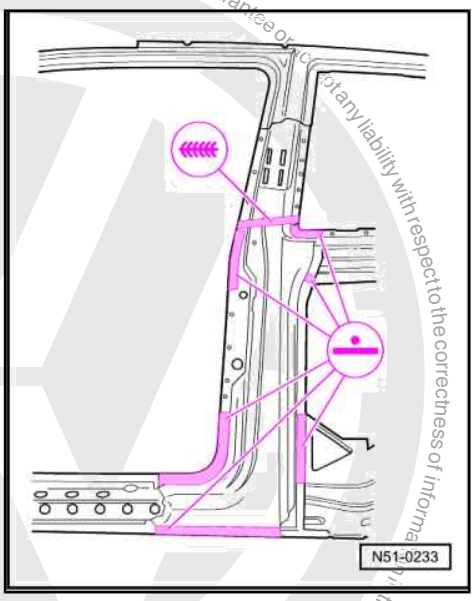

Protected by copyright. Copying for private or commercial purposes, in part or in whole, is not permitted unless authorised by Volkswagen AG. Volkswagen AG does not guarantee or accept any liability with respect to the correctness of information in this document. Copyright by Volkswagen AG.
satelettronica

RO: 51 41 55 50

8 Renewing B-pillar - part section 11.99 ► (2-door)

WARNING

Observe safety notes!

⇒ General Information; Body Repairs, General Body Repairs ; Chapter 1 - Safety notes .

8.1 Removing

Note

B-pillar is reinforced on vehicles from 11.99. This is the reason why the parting cut must be made above this reinforcing.

- Rear side member reinforcing already cut out.

8.1.1 Cutting locations

Protected by copyright. Copying for private or commercial purposes, in part or in whole, is not permitted unless authorised by Volkswagen AG. Volkswagen AG does not guarantee or accept any liability with respect to the correctness of information in this document. Copyright by Volkswagen AG.

satelettronica

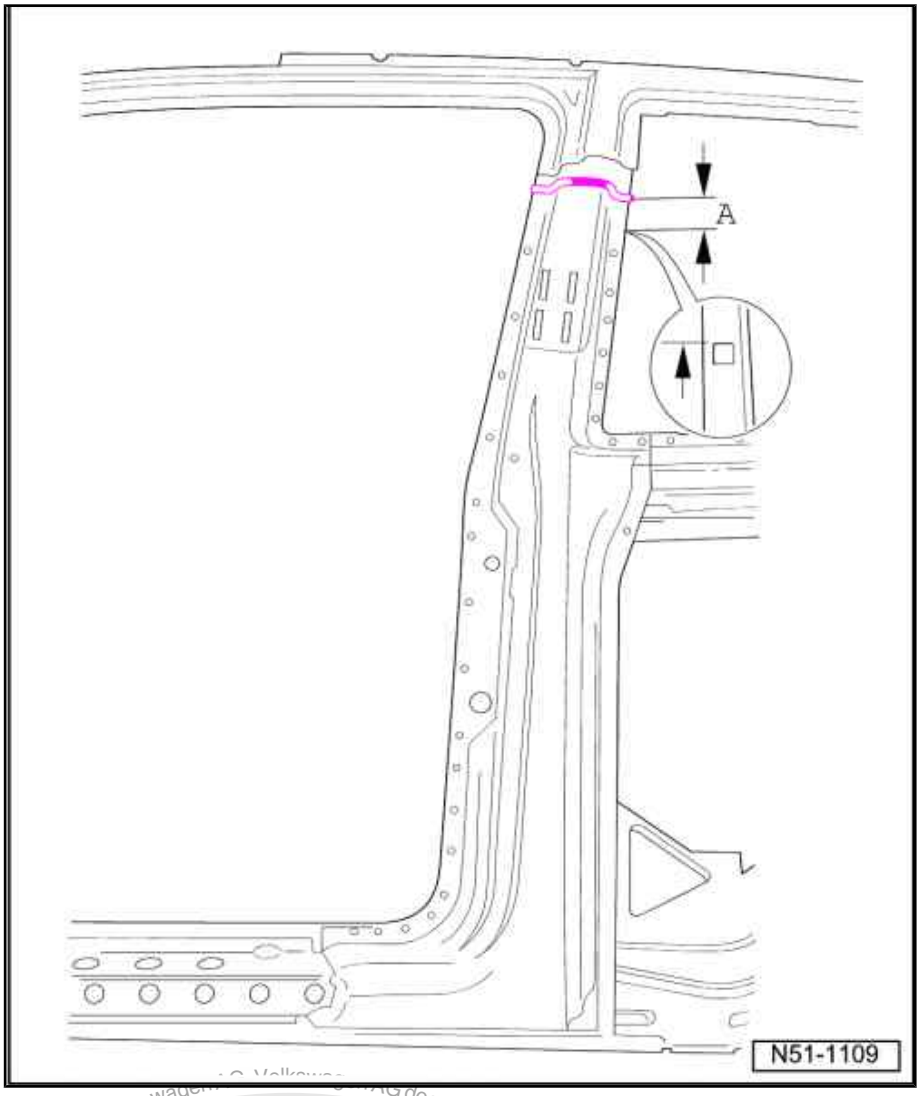

- Position parting cut for B-pillar above reinforcing plate.
- Dimension A = 30 mm.
- Drill out original joint of B-pillar.
- Remove remaining material.

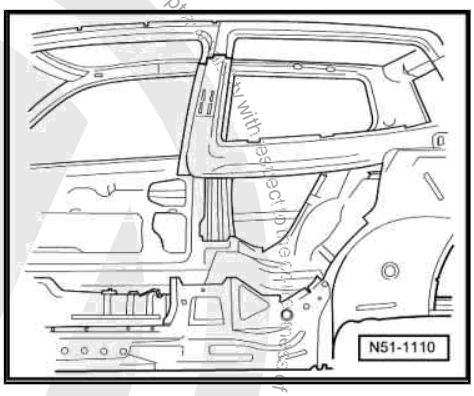

8.1.2 Replacement part

♦ B-pillar with reinforcing.

satelettronica

8.1.3 Welding in

Preparing new part

- Transfer parting cut to new part and cut out.
- Adapt B-pillar to fit with vehicle free of tension.
- Check precision of fit with door and side panel fitted.
- Butt weld parting cut, SG continuous weld seam.
- Spot weld B-pillar, RP spot weld seam.

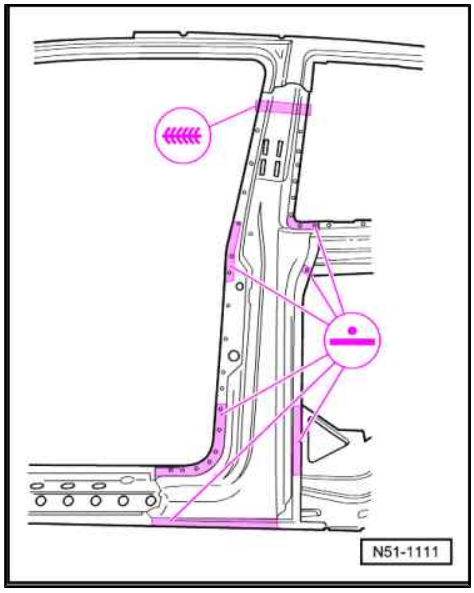

Protected by copyright. Copying for private or commercial purposes, in part or in whole, is not permitted unless authorised by Volkswagen AG. Volkswagen AG does not guarantee or accept any liability with respect to the correctness of information in this document. Copyright by Volkswagen AG.

satelettronica

Reproduction for commercial purposes, in part or in whole, is not permitted unless authorised by Volkswagen AG. Volkswagen AG does not guarantee or accept any liability with respect to the correctness of information in this document. Copyright by Volkswagen AG.

RO: 51 41 55 52

9 Renewing B-pillar (4-door)

WARNING

Observe safety notes!

⇒ General Information; Body Repairs, General Body Repairs ; Chapter 1 - Safety notes .

9.1 Removing

Note

Only a complete replacement is permitted due to internal reinforcing!

- Rear side member reinforcement already cut out, applies to vehicles ▸ 11.99.

9.1.1 Cutting locations

satelettronica

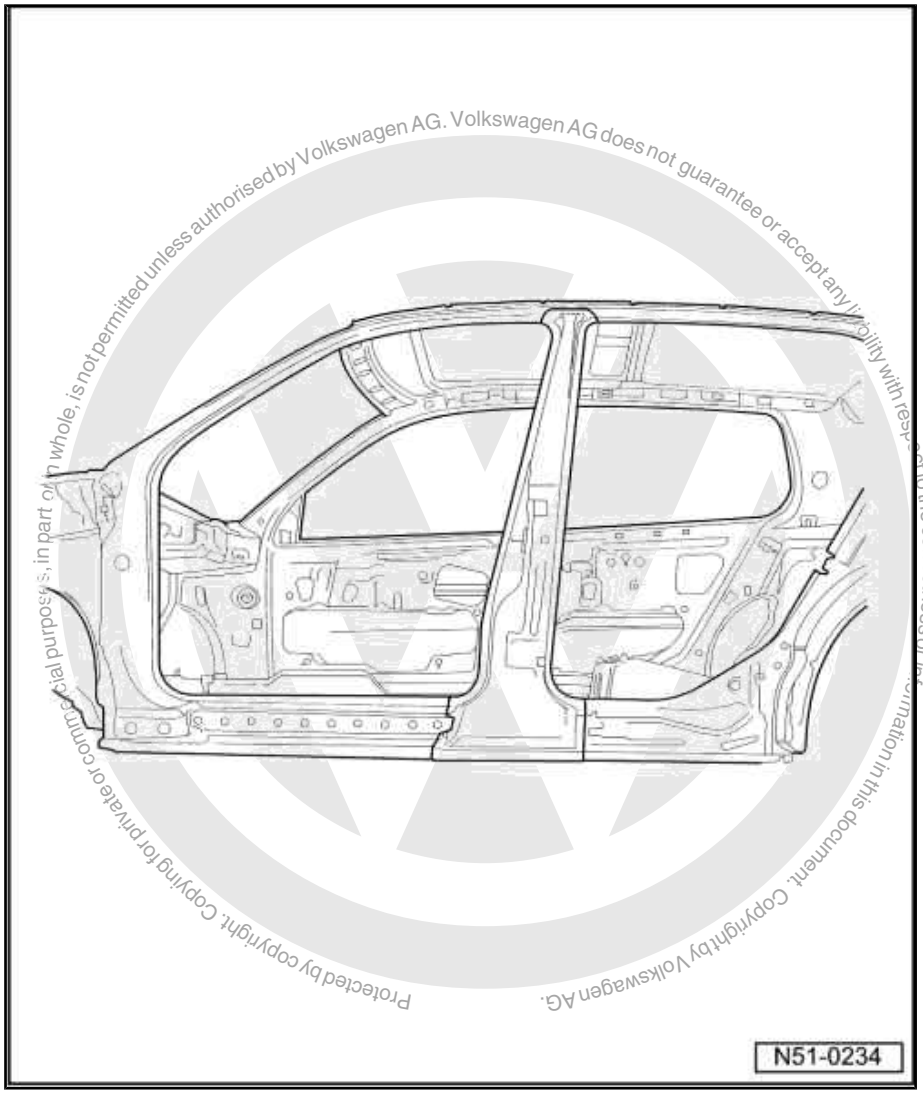

Protected by copyright. Copying for private or commercial purposes, in part or in whole, is not permitted unless authorised by Volkswagen AG. Volkswagen AG does not guarantee or accept any liability with respect to the correctness of information in this document. Copyright by Volkswagen AG.

– Drill out original joint of B-pillar.
– Cut out inner B-pillar.

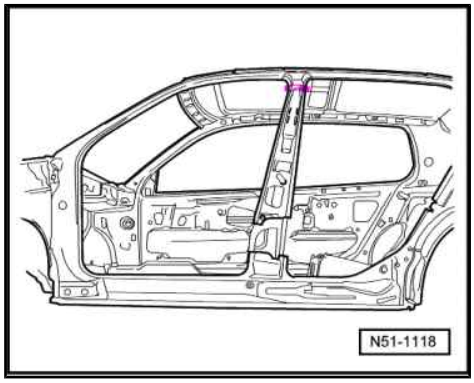

Note

Leave original joint to roof due to corrosion protection reasons.

satelettronica

– Remove remaining material.

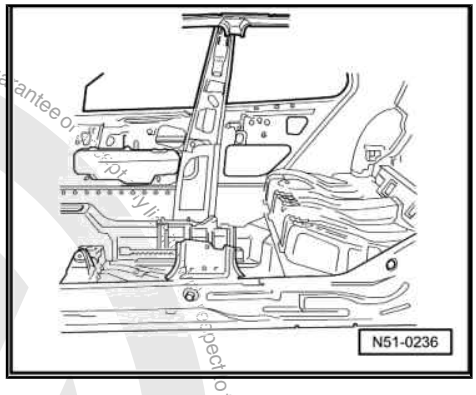

9.1.2 Replacement parts

Note

Different B-pillars were installed in vehicles ‣ 10.99 and vehicles 11.99 ‣.

- Outer B-pillar
- Inner B-pillar

9.1.3 Welding in

Preparing new parts

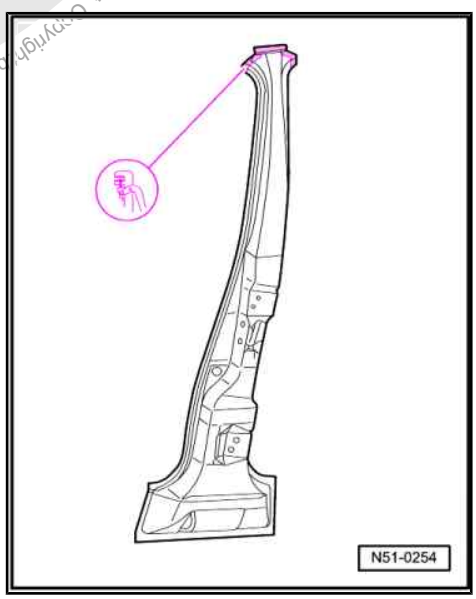

– Make holes in outer joint surface of new part.

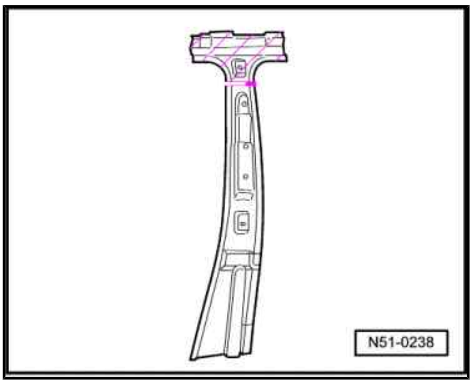

Protected by copyright. Copying for private or commercial purposes, in part or in whole, is not permitted unless authorised by Volkswagen AG. Volkswagen AG does not guarantee or assume any liability with respect to the correctness of information in this document. Copyright by Volkswagen AG.

satelettronica

- Transfer inner B-pillar parting cut to new part and remove shaded area.
- Adapt B-pillar to fit with vehicle free of tension.
- Check exactness of fit with doors installed.
- Spot weld B-pillar, RP spot weld seam.

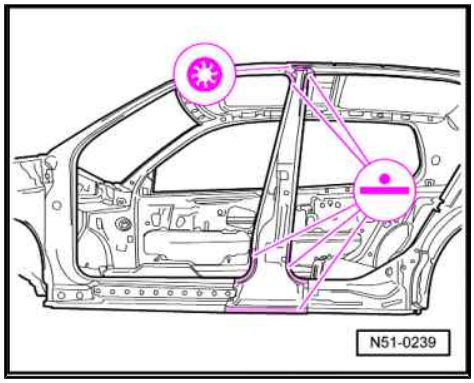

- Weld in remaining joint, SG plug weld seam.
- Butt weld parting cut, SG continuous weld seam.
- Spot weld remaining joint in, RP spot weld seam.

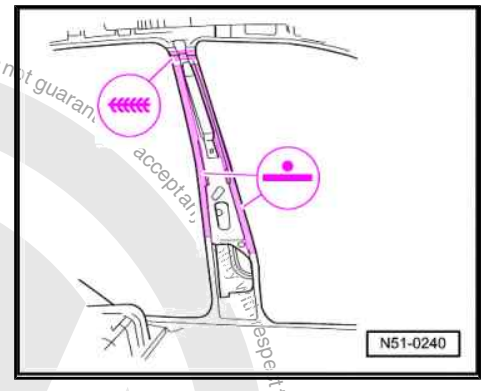

Protected by copyright. Copying for private or commercial purposes, in part or in whole, is not permitted unless authorised by Volkswagen AG. Volkswagen AG does not guarantee or accept any liability with respect to the correctness of information in this document. Copyright by Volkswagen AG.

satelettronica

RO: 51 45 55 00

10 Renewing outer side member (2-door)

Protected by copyright. Copying for private or commercial purposes, in part or in whole, is not permitted unless authorised by Volkswagen AG. Volkswagen AG does not guarantee or accept any liability with respect to the correctness of information in this document. Copyright by Volkswagen AG.

WARNING

Observe safety notes!

⇒ General Information; Body Repairs, General Body Repairs ; Chapter 1 - Safety notes .

10.1 Removing

Note

If the extent of damage permits, the following method of repair can be used.

10.1.1 Cutting locations

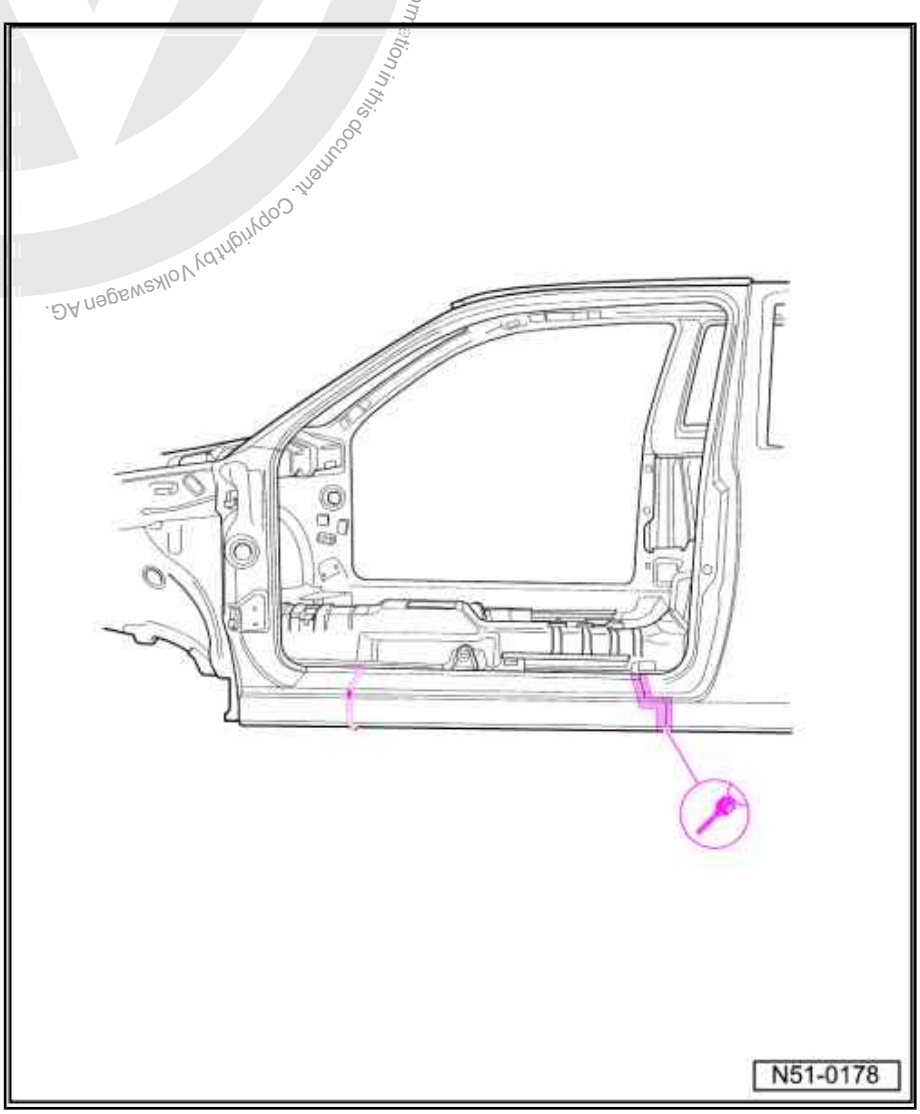

satelettronica

- Drill out spot welds.
- Separate original joint to floor panel.
- Position side member parting cuts according to degree of damage.
- Butt weld parting cut, SG continuous weld seam.
- Remove remaining material.

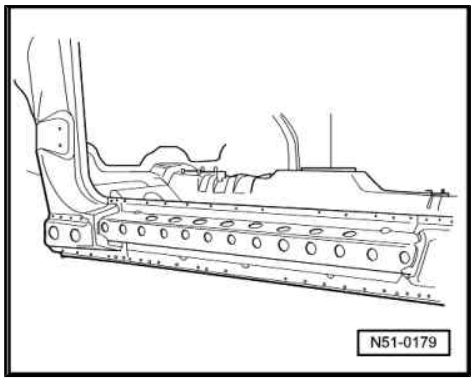

10.1.2 Replacement part

♦ Side member

10.1.3 Welding in

Preparing new part

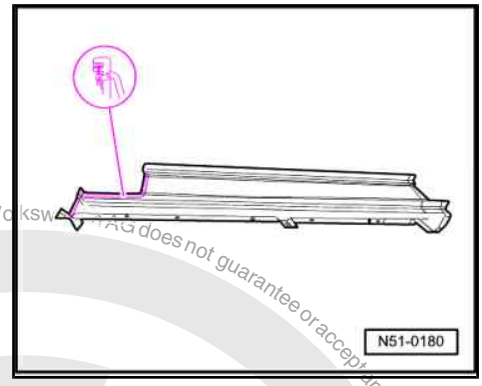

- Make holes in outer joint surface of new part.
- Adapt side member to fit with vehicle stress free.
- Weld in side member, RP spot weld seam.
- Weld in remaining joint, SG plug weld seam.

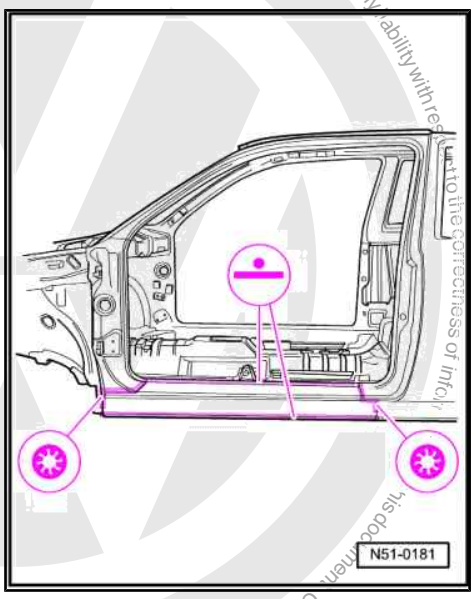

Protected by copyright. Copying for private or commercial purposes, in part or in whole, is not permitted unless authorised by Volkswagen AG. Volkswagen AG does not guarantee or accept any liability with respect to the correctness of information in this document. Copyright by Volkswagen AG.
satelettronica

RO: 51 49 55 00

11 Renewing inner side member reinforcement 11.99 ▸ (2-door)

WARNING

Observe safety notes!

⇒ General Information; Body Repairs, General Body Repairs ; Chapter 1 - Safety notes .

11.1 Removing

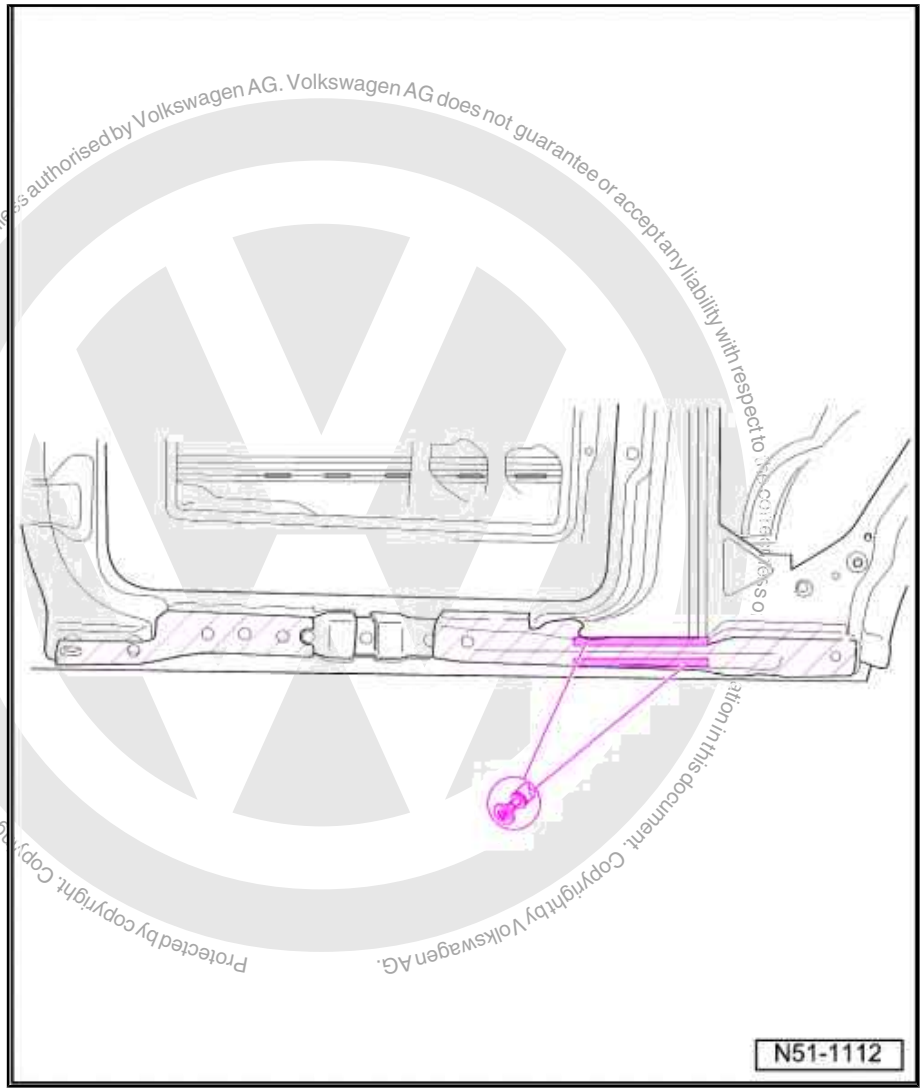

Protected by copyright. Copying for private or commercial purposes, in part or in whole, is not permitted unless authorised by Volkswagen AG. Volkswagen AG does not guarantee or accept any liability with respect to the correctness of information in this document. Copyright by Volkswagen AG.

satelettronica

- Drill out spot welds.
- Separate original joint of front side member reinforcement.
- Grind down joint of rear side member reinforcing to B-pillar with an angle grinder.

Note

This area is MIG brazed during production. The brazing is not visible. This is the reason why the securing flange must be ground down completely.

– Separate remaining original joint to inner side member.
– Remove remaining material.

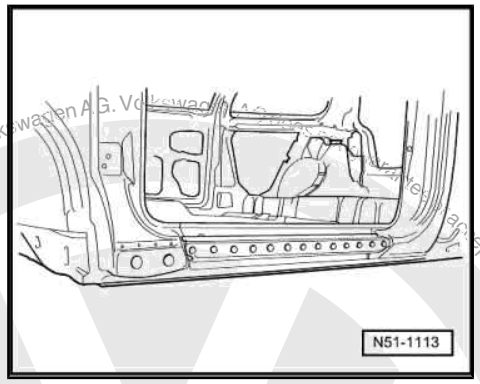

11.1.1 Replacement parts

- Front reinforcing for inner side member.
- Rear reinforcing for inner side member.

Preparing new part

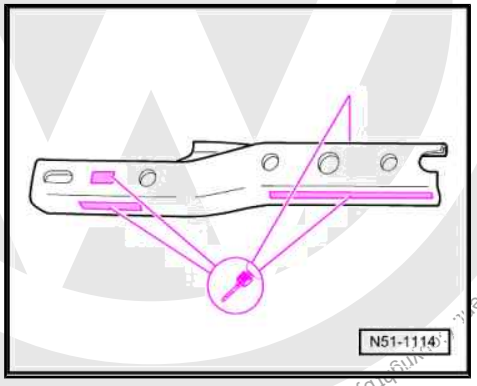

– Make holes in front reinforcing for inner side member.
– Make holes in rear reinforcing for inner side member.

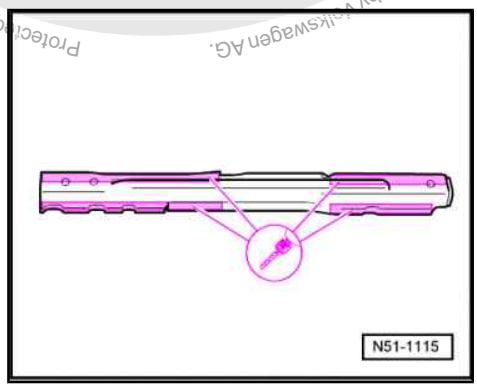

Protected by copyright. Copying for private or commercial purposes, in part or in whole, is not permitted unless authorised by Volkswagen AG. Volkswagen AG does not accept any liability with respect to the correctness of information in this document. Copyright by Volkswagen AG.
satelettronica

11.1.2 Welding in

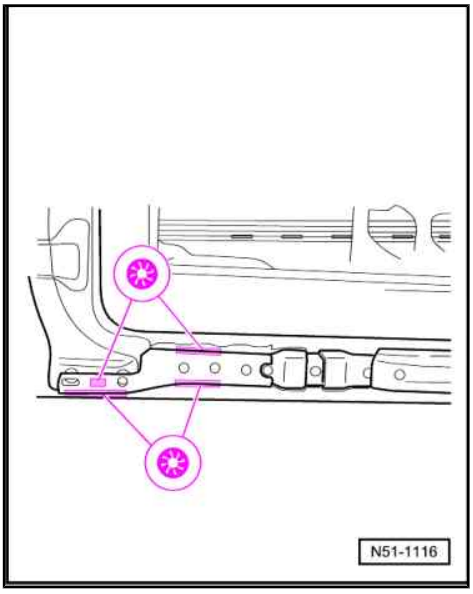

- Weld in front reinforcing for inner side member, SG plug weld seam.
- Weld in rear reinforcing for inner side member, SG plug weld seam.

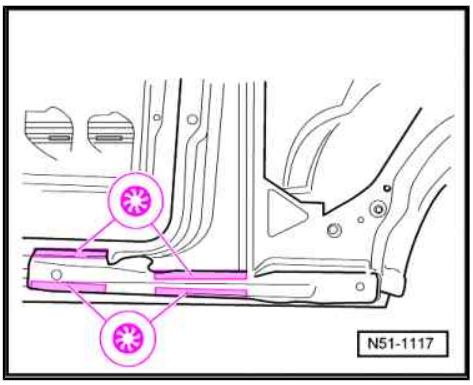

Protected by copyright. Copying for private or commercial purposes, in part or in whole, is not permitted unless authorised by Volkswagen AG. Volkswagen AG does not guarantee or accept any liability with respect to the correctness of information in this document. Copyright by Volkswagen AG.

satelettronica

RO: 51 49 55 00

12 Renewing inner side member reinforcement 11.99 ▸ (4-door)

WARNING

Observe safety notes!

⇒ General Information; Body Repairs, General Body Repairs ; Chapter 1 - Safety notes .

12.1 Removing

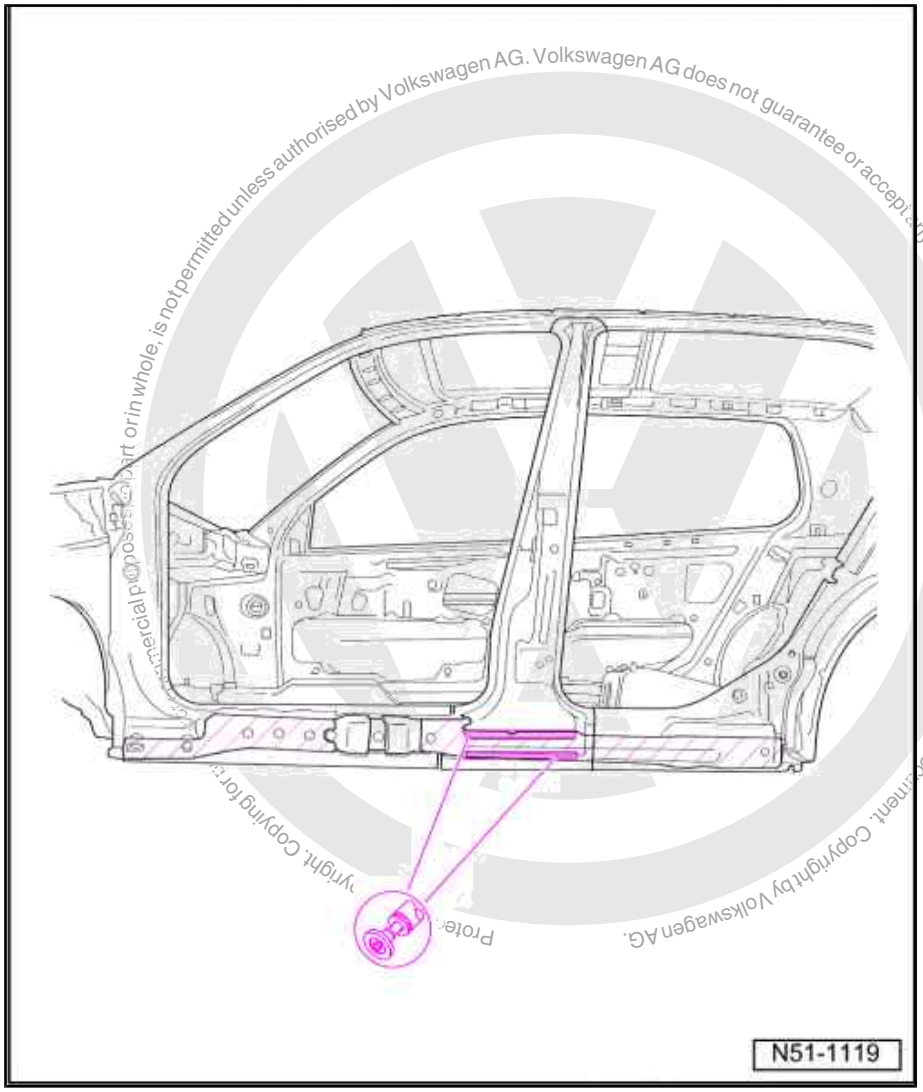

- Outer side member already cut out.

– Drill out spot welds.

– Separate original joint of front side member reinforcement.

– Grind down joint of rear side member reinforcing to B-pillar with an angle grinder.

satelettronica

Note

This area is MIG brazed during production. The brazing is not visible. This is the reason why this area must be ground down completely.

– Separate remaining original joint to inner side member.
– Remove remaining material.

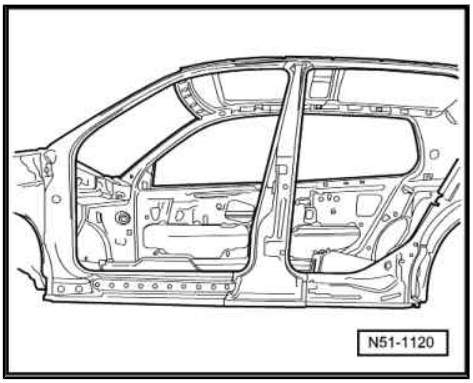

12.1.1 Replacement parts

♦ Front reinforcing for inner side member.
♦ Rear reinforcing for inner side member.

Preparing new part

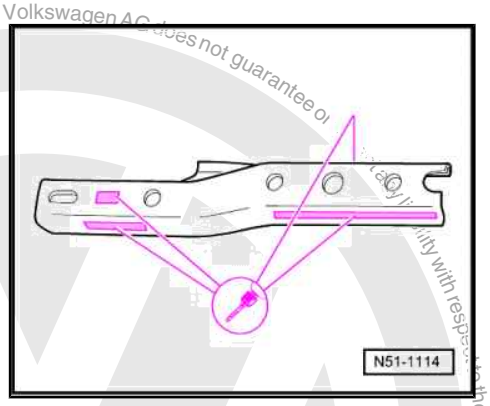

– Make holes in front reinforcing for inner side member.
– Make holes in rear reinforcing for inner side member.

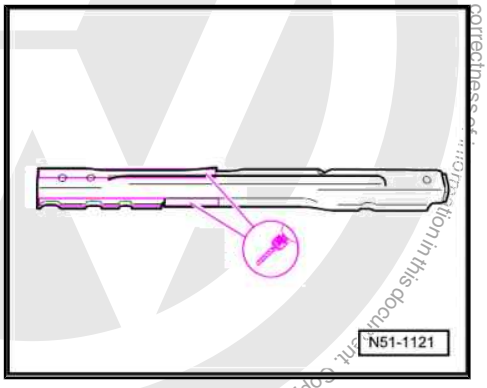

Protected by copyright. Copying for private or commercial purposes, in part or in whole, is not permitted unless authorised by Volkswagen AG. Volkswagen AG does not guarantee or ... the correctness of information in this document. Copyright by Volkswagen AG.
satelettronica

12.1.2 Welding in

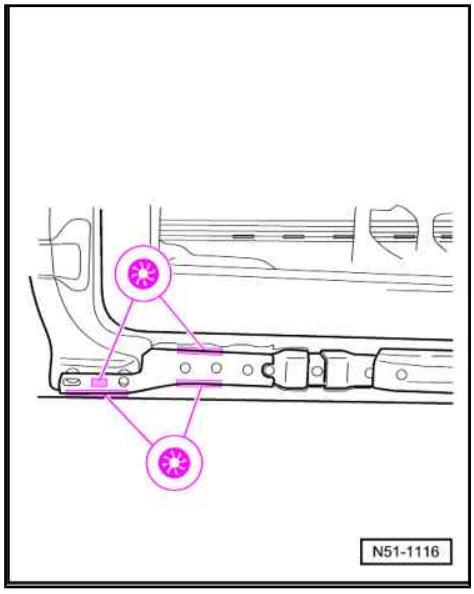

– Weld in front reinforcing for inner side member, SG plug weld seam.
– Weld in rear reinforcing for inner side member, SG plug weld seam.

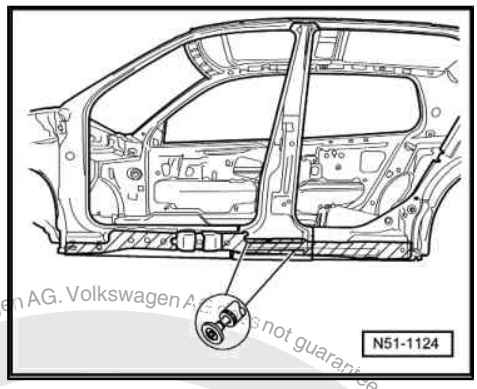

Protected by copyright. Copying for private or commercial purposes, in part or in whole, is not permitted unless authorised by Volkswagen AG. Volkswagen AG does not guarantee or accept any liability with respect to the correctness of information in this document. Copyright by Volkswagen AG.
satelettronica

RO: 51 45 55 02

13 Renewing outer side member (4-door)

WARNING

Observe safety notes!

⇒ General Information; Body Repairs, General Body Repairs ; Chapter 1 - Safety notes .

13.1 Removing

Note

- *Area -A- is welded only on vehicles 11.99 ▸.*
- *If the extent of damage permits, the following method of repair can be used.*

13.1.1 Cutting locations

Protected by copyright. Copying for private or commercial purposes, in part or in whole, is not permitted unless authorised by Volkswagen AG. Volkswagen AG does not guarantee or accept any liability with respect to the correctness of information in this document. Copyright by Volkswagen AG.

satelettronica

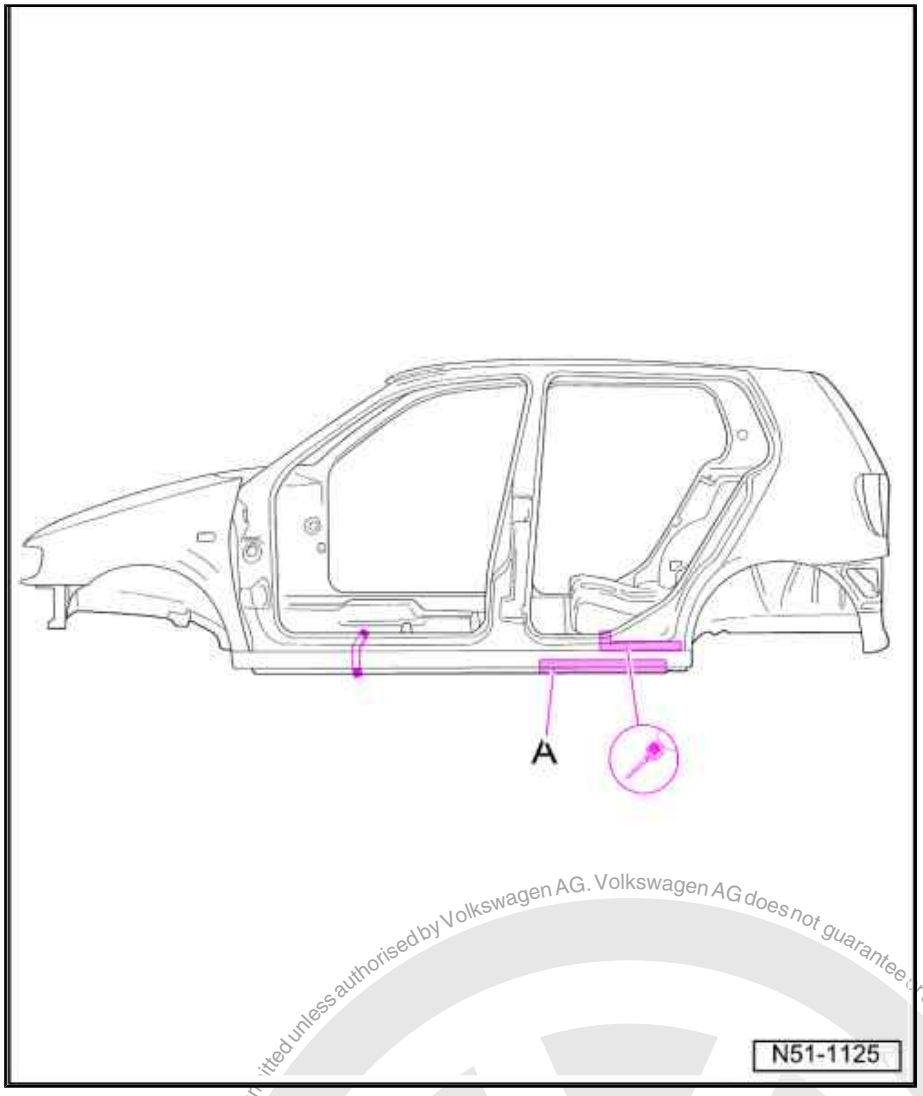

- Drill out spot welds.
- Separate original joint to floor panel.
- Position side member parting cuts according to degree of damage.
- Butt weld parting cut, SG continuous weld seam.
- Remove remaining material.

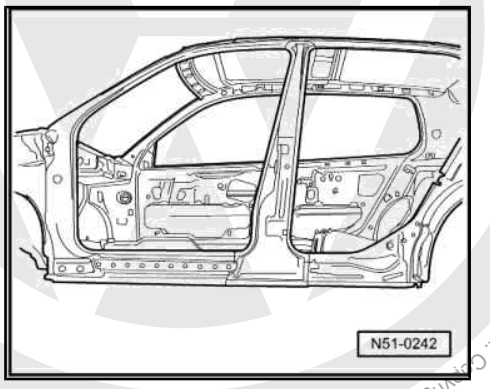

13.1.2 Replacement part

♦ Side member

Protected by copyright. Copying for private or commercial purposes, in part or in whole, is not permitted unless authorised by Volkswagen AG. Volkswagen AG does not guarantee or accept any liability with respect to the correctness of information in this document. Copyright by Volkswagen AG.
satelettronica

13.1.3 Welding in

Preparing new part

– Make holes in outer joint surface of new part.

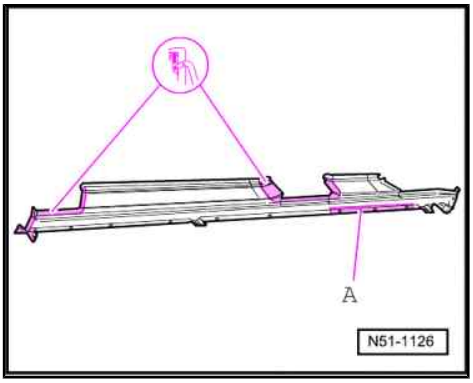

– Additionally make holes in area -A- on vehicles 11.99 ▸.
– Adapt side member to fit with vehicle stress free.
– Weld in side member, RP spot weld seam.
– Weld in remaining joint, SG plug weld seam.
– Additionally weld in area -A- on vehicles 11.99 ▸, SG plug weld seam.

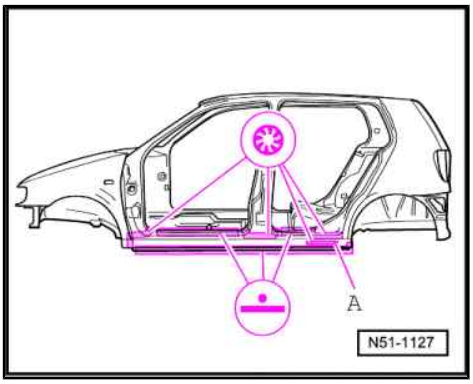

Protected by copyright. Copying for private or commercial purposes, in part or in whole, is not permitted unless authorised by Volkswagen AG. Volkswagen AG does not guarantee or accept any liability with respect to the correctness of information in this document. Copyright by Volkswagen AG.

satelettronica

RO: 51 47 55 00

14 Renewing inner side member (2-door)

Protected by copyright. Copying for private or commercial purposes, in part or in whole, is not permitted unless authorised by Volkswagen AG. Volkswagen AG does not guarantee or accept any liability with respect to the correctness of information in this document. Copyright by Volkswagen AG.

WARNING

Observe safety notes!

⇒ General Information; Body Repairs, General Body Repairs ; Chapter 1 - Safety notes .

14.1 Removing

14.1.1 Cutting locations

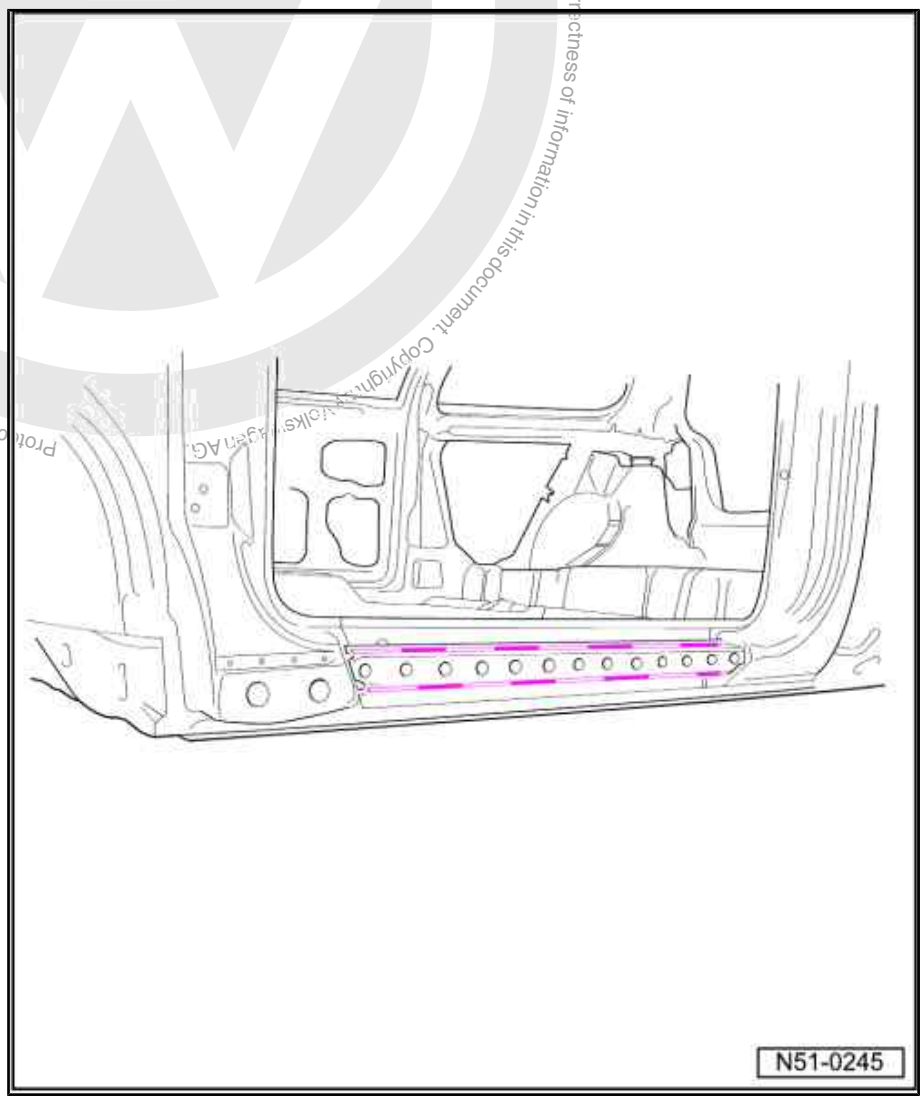

satelettronica

– Separate original joint to floor panel.
– Remove remaining material.

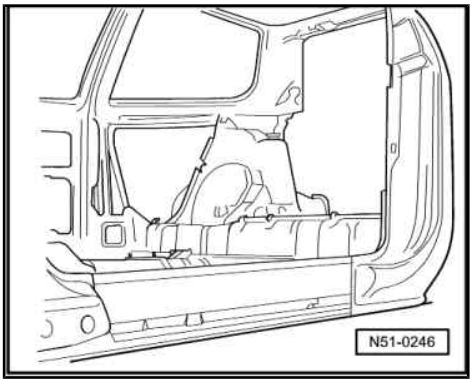

14.1.2 Replacement part

♦ Inner side member - parts designation: web plate for side member

14.1.3 Welding in

– Adapt inner side member to fit with vehicle free of tension.
– Weld in new part, RP spot weld seam.

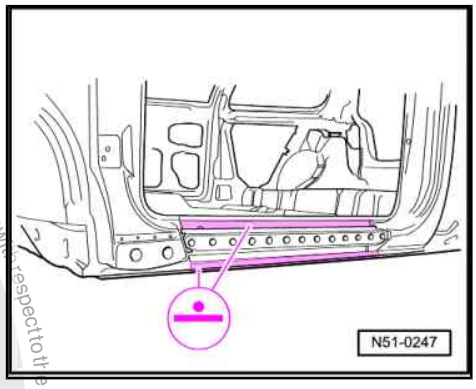

Protected by copyright. Copying for private or commercial purposes, in part or in whole, is not permitted unless authorised by Volkswagen AG. Volkswagen AG does not guarantee or accept any liability with respect to the correctness of information in this document. Copyright by Volkswagen AG.
satelettronica

RO: 51 47 55 00

15 Renewing inner side member (4-door)

WARNING

Observe safety notes!

Copyright by Volkswagen AG. Volkswagen AG does not guarantee or accept any liability with respect to the correctness of information in this document. Copyright by Volkswagen AG. Copying for private or commercial purposes, in part or in whole, is not permitted unless authorised by Volkswagen AG.

⇒ General Information; Body Repairs, General Body Repairs ; Chapter 1 - Safety notes .

15.1 Removing

15.1.1 Cutting locations

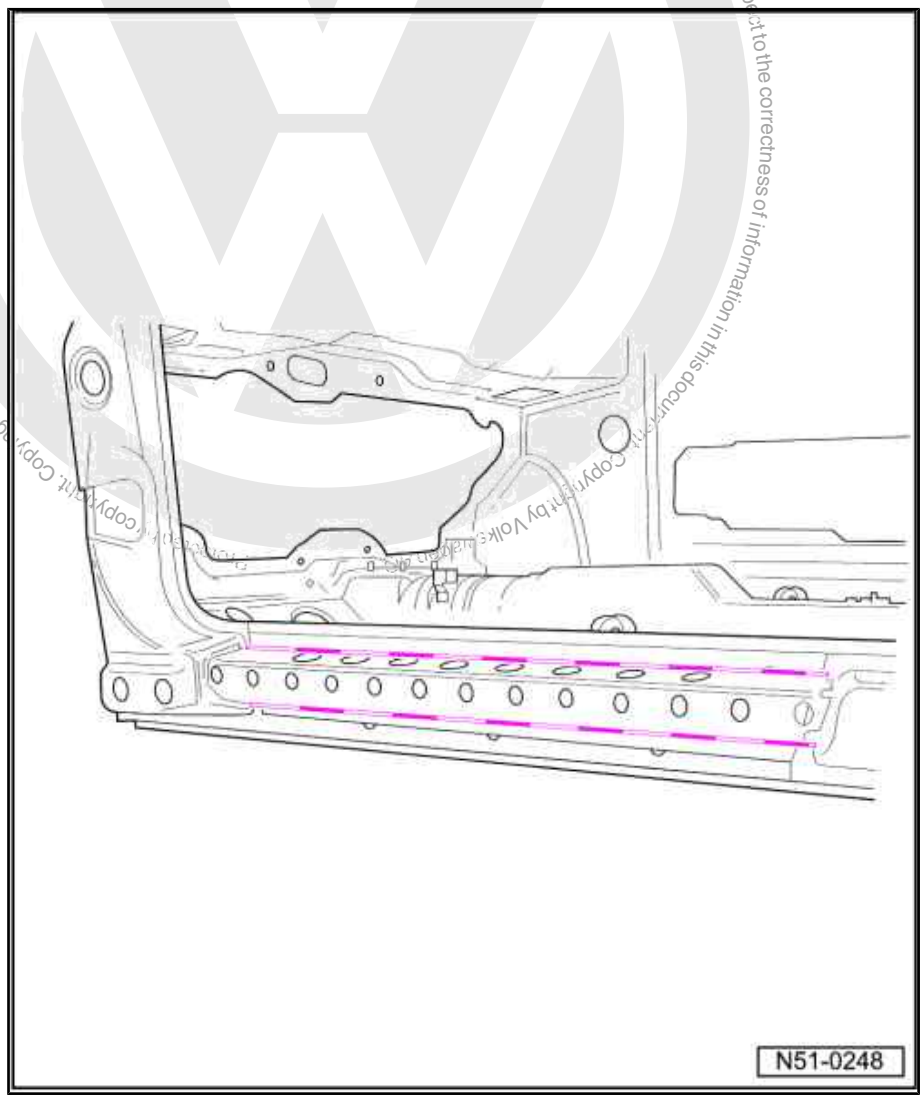

– Separate original joint to floor panel.
– Remove remaining material.

satelettronica

15.1.2 Replacement part

- Inner side member - parts designation: web plate for side member

15.1.3 Welding in

– Adapt inner side member to fit with vehicle free of tension.

– Weld in new part, RP spot weld seam.

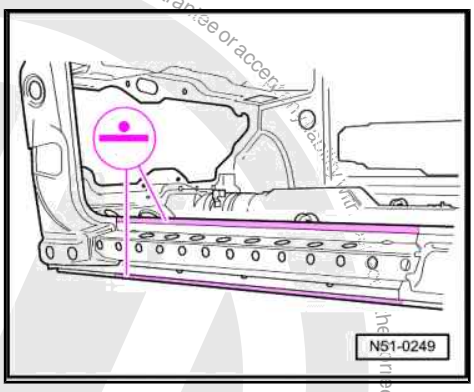

Protected by copyright. Copying for private or commercial purposes, in part or in whole, is not permitted unless authorised by Volkswagen AG. Volkswagen AG does not guarantee or accept any liability with respect to the correctness of information in this document. Copyright by Volkswagen AG.
satelettronica

RO: 51 73 55 50

16 Renewing floor panel

WARNING

Observe safety notes!

⇒ General Information; Body Repairs, General Body Repairs ; Chapter 1 - Safety notes .

16.1 Removing

Note

The seat cross member and guide rail must always be replaced complete.

16.1.1 Cutting locations

1 - Cutting line for complete replacement

2 - Cutting line for part section renewal

- Locate parting cut according to degree of damage.
- Cut out floor panel.

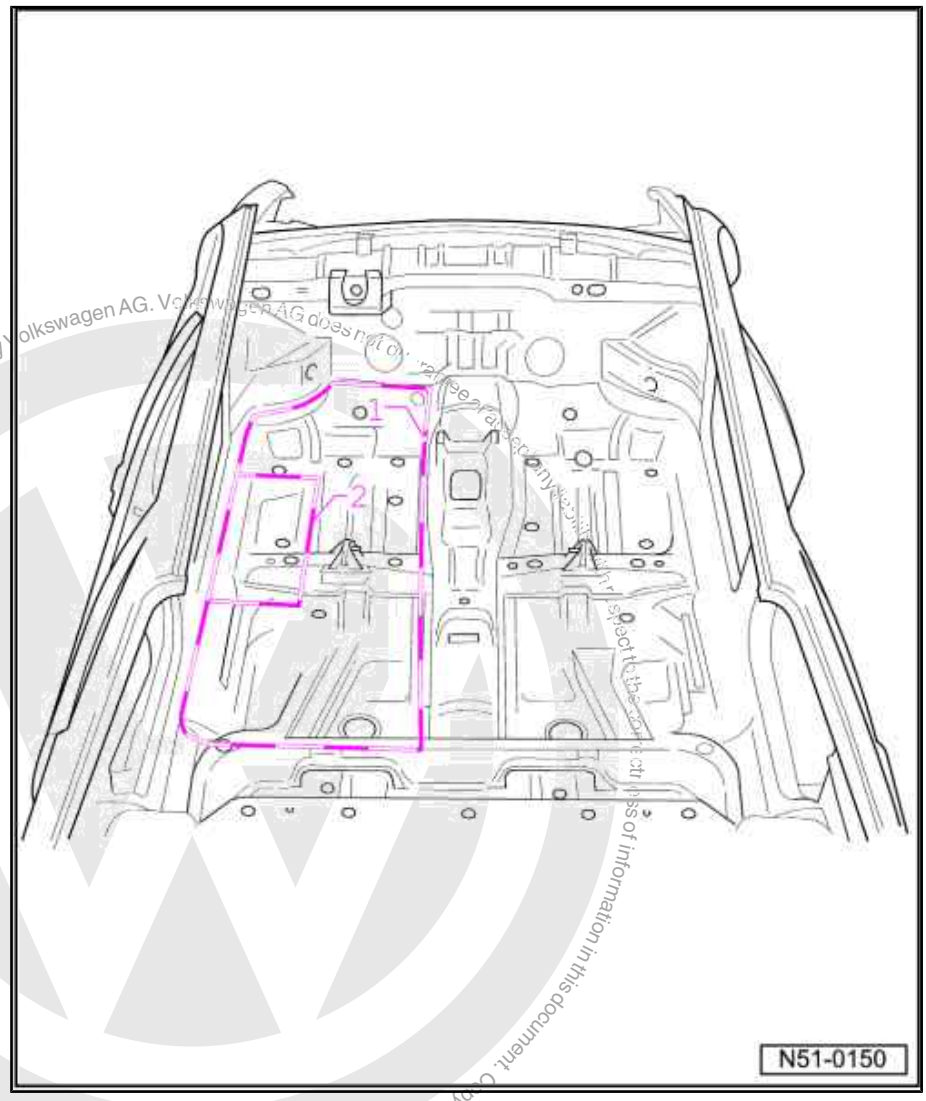

Protected by copyright. Copying for private or commercial purposes, in part or in whole, is not permitted unless authorised by Volkswagen AG. Volkswagen AG does not guarantee or accept any liability with respect to the correctness of information in this document. Copyright by Volkswagen AG.

satelettronica

16.1.2 Part section

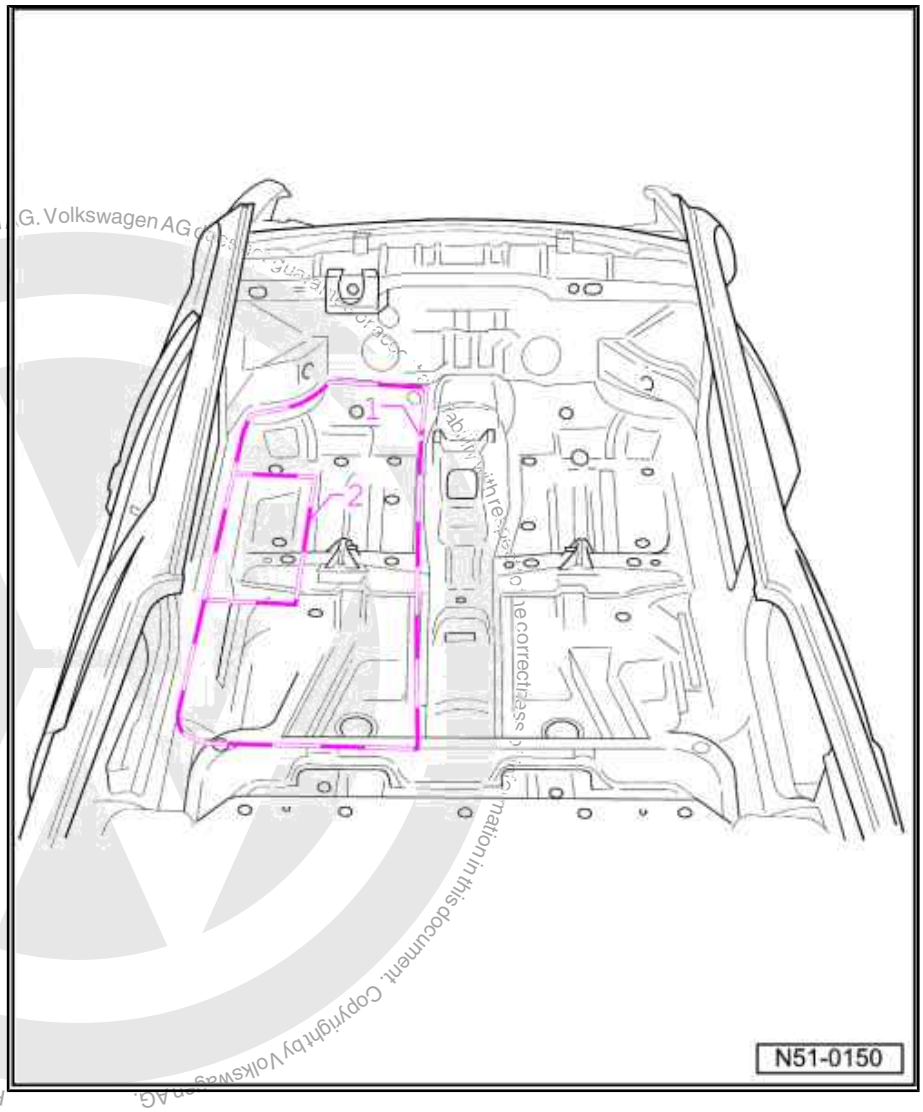

Protected by copyright. Copyright for private or commercial purposes, in part or in whole, is not permitted unless authorised by Volkswagen AG. Copyright by Volkswagen AG.

satelettronica

- At parting cut -2-, carry out offset overlap weld to both sides, SG staggered continuous weld seam.
- Remove remaining material.

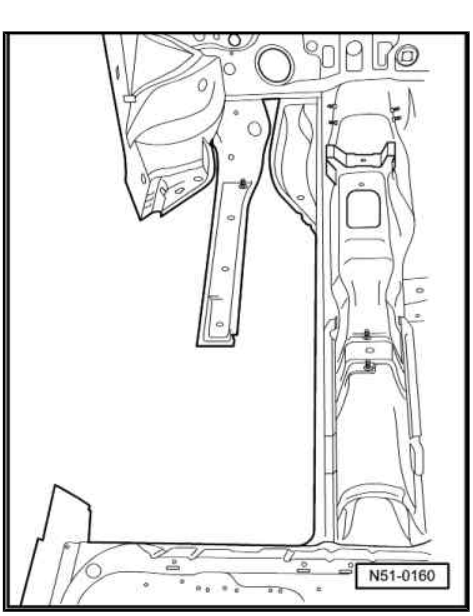

16.1.3 Replacement parts

- Floor panel
- Floor panel connecting plate
- Seat cross member
- Guide rail
- Cover plate
- Weld nut
- Welding pins

16.1.4 Welding in

Preparing new parts

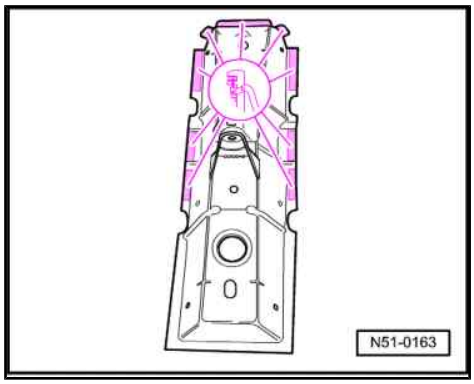

– Make holes in outer joint surface of new part.
– Centralize weld nut and weld in, SG continuous weld seam.
– Make holes in outer joint surface of new part.
– Drill holes for SG plug weld seam (7 mm ∅).

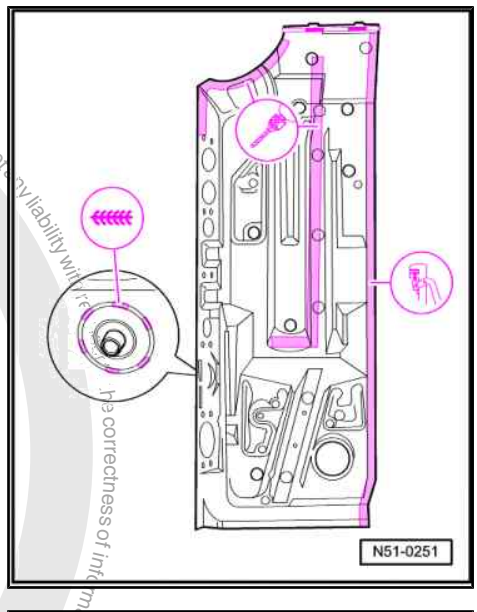

– Transfer parting cut to new part and cut out.
– Fix new part on alignment bracket.

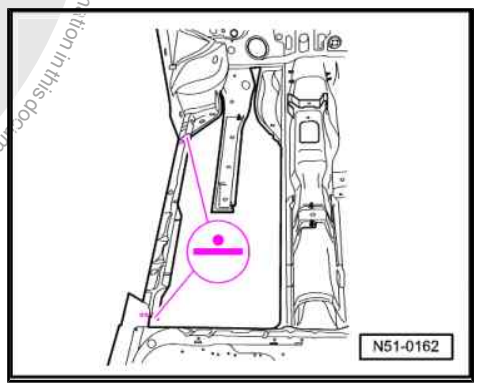

Protected by copyright. Copying for private or commercial purposes, in part or in whole, is not permitted unless authorised by Volkswagen AG. Volkswagen AG does not guarantee or accept any liability with respect to the correctness of information in this document. Copyright by Volkswagen AG.
satelettronica

– Weld in new part, RP spot weld seam.
– Adapt new part to fit and fix in position.
– Weld in floor panel, RP spot weld seam.
– At transition to bulkhead, SG staggered continuous weld seam.

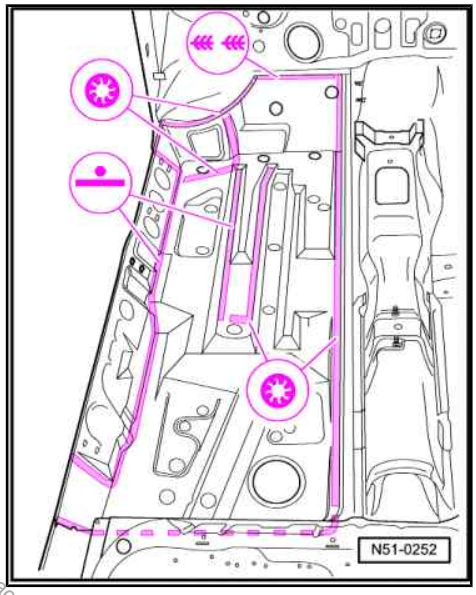

– Weld in remaining joint, SG plug weld seam.
– Align seat cross member and hold in position.

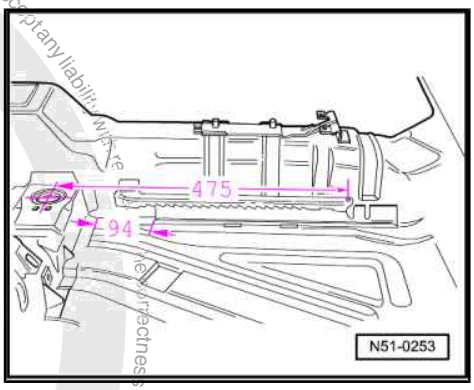

Dimensions in mm
– Weld in seat cross member, RP spot weld seam.
– Weld in remaining joint, SG plug weld seam.

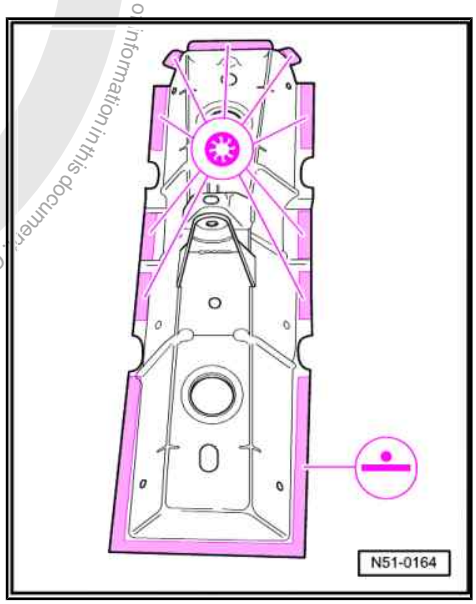

16.1.5 Dimensioning of welding pin positions

Protected by copyright. Copying for private or commercial purposes, in part or in whole, is not permitted unless authorised by Volkswagen AG. Volkswagen AG does not guarantee or accept any liability with respect to the correctness of information in this document. Copyright by Volkswagen AG.
satelettronica

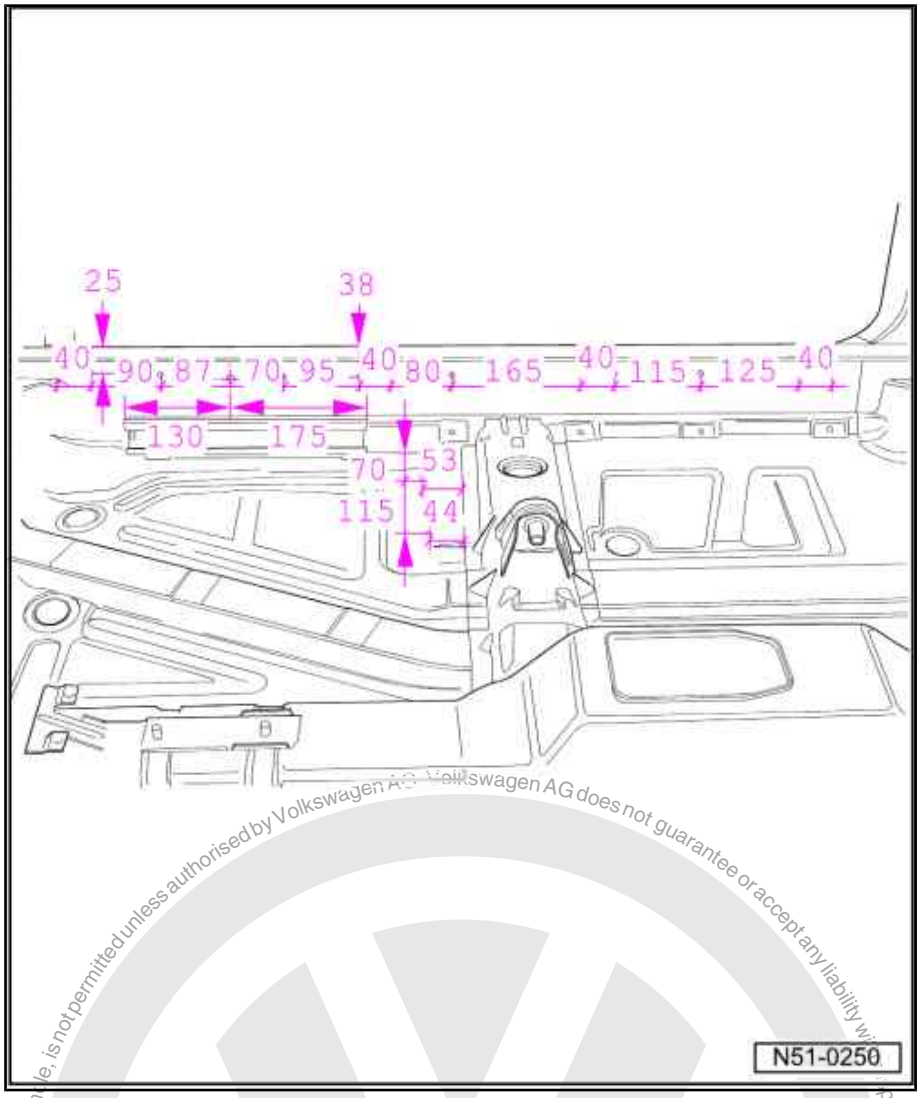

Dimensions in mm

- Weld in seat guide rail, SG plug weld seam.
- Weld in remaining joint, SG continuous weld seam.

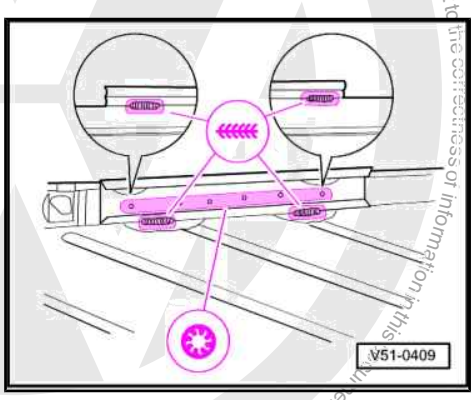

Protected by copyright. Copying for private or commercial purposes, in part or in whole, is not permitted unless authorised by Volkswagen AG. Volkswagen AG does not guarantee or accept any liability with respect to the correctness of information in this document. Copyright by Volkswagen AG.
satelettronica

53 – Body - rear

RO: 53 05 55 00

1 Renewing rear cross panel

WARNING

Observe safety notes!

⇒ General Information; Body Repairs, General Body Repairs ; Chapter 1 - Safety notes.

1.1 Removing

1.1.1 Cutting locations

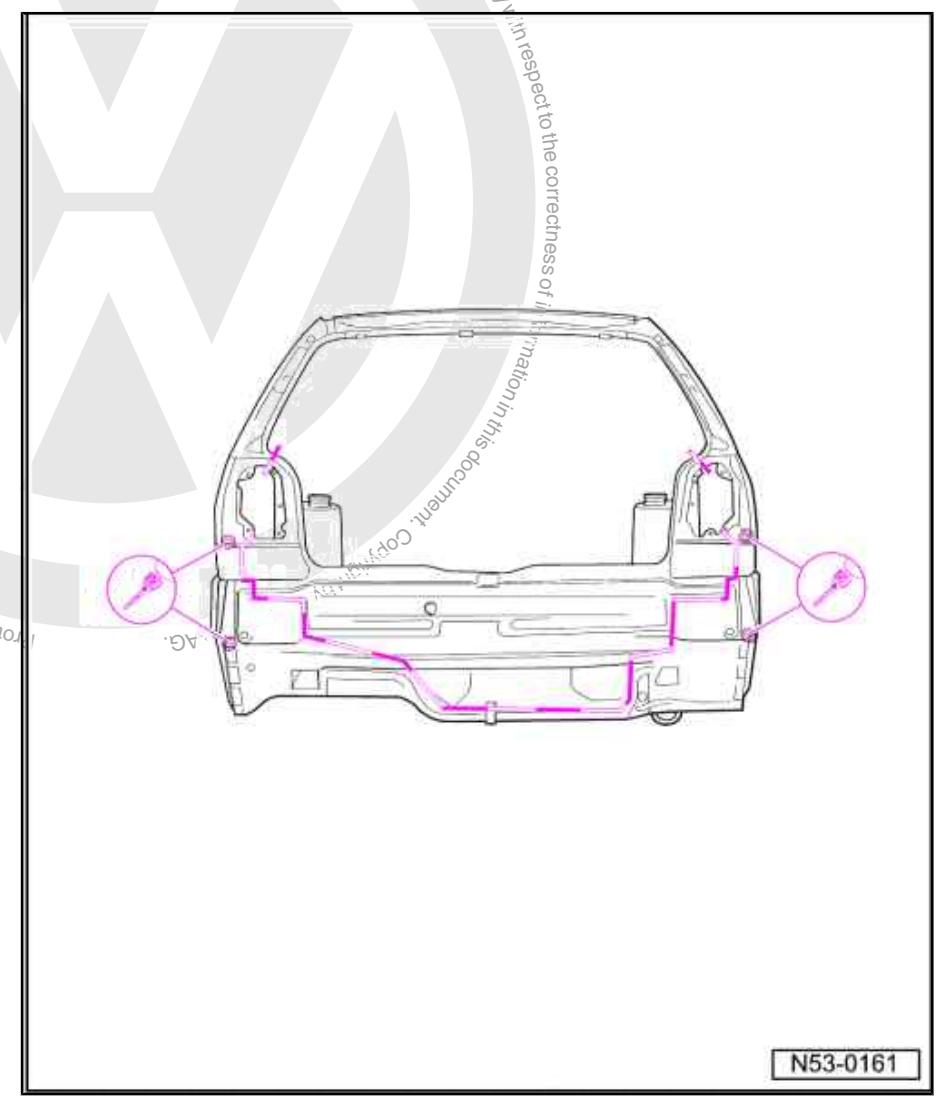

– Cut out rear cross panel.
– Drill out spot welds.

satelettronica

– Remove remaining material.

1.1.2 Replacement parts

- Rear cross panel
- Lock carrier
- Rear cross panel inserts

1.1.3 Welding in

Preparing new parts

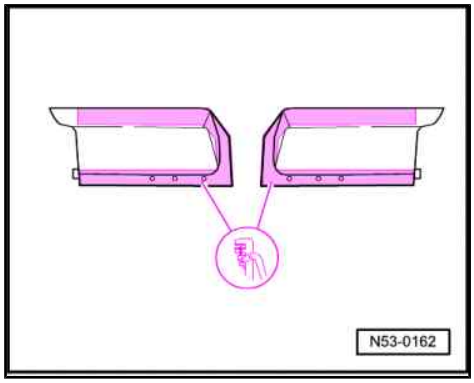

– Make holes in outer joint area of new part.

– Hold rear cross panel with one side below the inwards facing weld flange -arrow-.

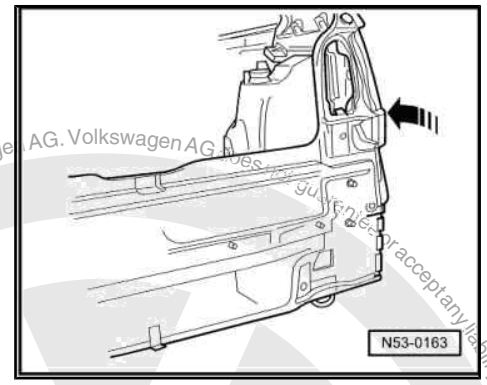

– Slide rear cross panel simultaneously between wheel housing and side panel.

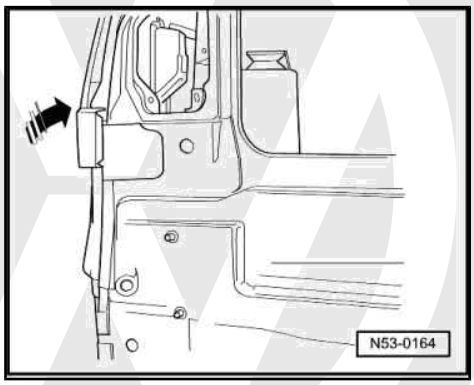

– On the opposite side, the part of the cross panel which is inclined inwards is lifted carefully over the the side panel flange -arrow-.

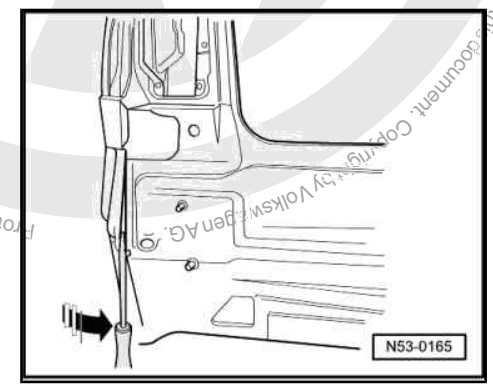

Protected by copyright. Copying for private or commercial purposes, in part or in whole, is not permitted unless authorised by Volkswagen AG. Volkswagen AG does not guarantee or accept any liability with respect to the correctness of information in this document. Copyright by Volkswagen AG.
satelettronica

– Now lever cross panel under side panel, using a screwdriver and fitted in.

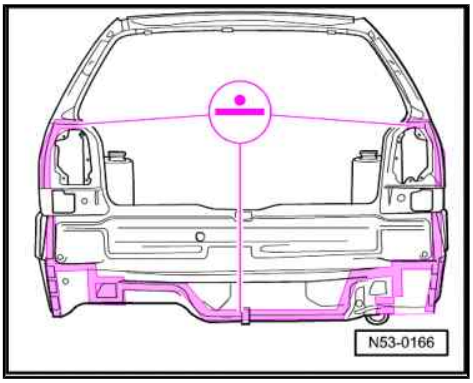

– Spot weld cross panel, RP spot weld seam.

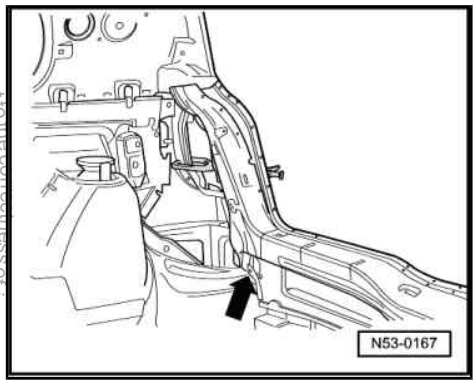

– Push lock carrier between longitudinal member reinforcing and cross panel from inside -arrow- and bring into installation position.
– Fit in rear cross panel inserts.
– Check gap to tail light and rear lid.
– Check locking function of rear lid.
– Spot weld cross panel and lock carrier, RP spot weld seam.

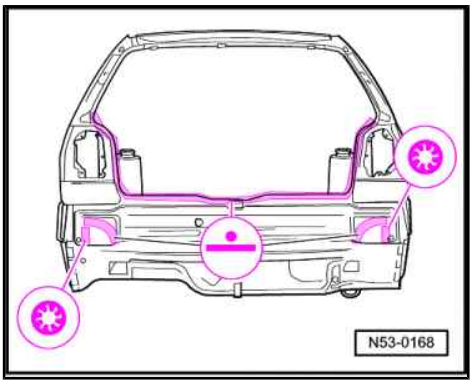

– Weld in remaining joint, SG plug weld seam.
– Weld in inserts, SG plug weld seam.
– Additionally weld in from inside, RP spot weld seam.

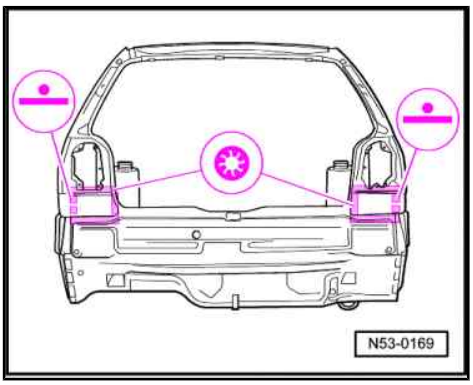

Protected by copyright. Copying for private or commercial purposes, in part or in whole, is not permitted unless authorised by Volkswagen AG. Volkswagen AG does not guarantee or accept any liability with respect to the correctness of information in this document. Copyright by Volkswagen AG.
satelettronica

RO: 53 24 55 62

2 Renewing rear luggage compartment floor - part section

WARNING

Observe safety notes!

⇒ General Information; Body Repairs, General Body Repairs ; Chapter 1 - Safety notes .

2.1 Removing

Note

The replacement subpart is welded to the cross member.

2.1.1 Cutting locations

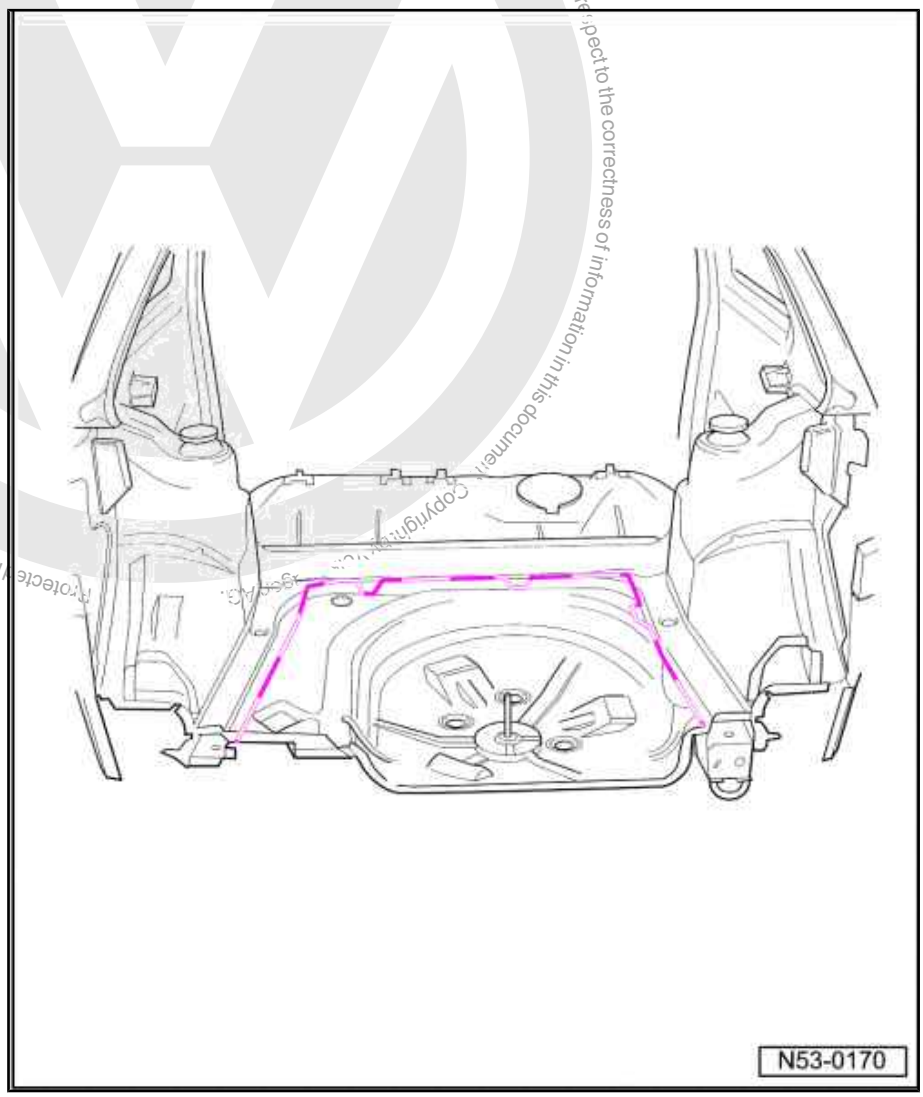

Protected by copyright. Copying for private or commercial purposes, in part or in whole, is not permitted unless authorised by Volkswagen AG. Volkswagen AG does not guarantee or accept any liability with respect to the correctness of information in this document. Copyright by Volkswagen AG.
satelettronica

– Position parting before cross member.
– Remove remaining material.

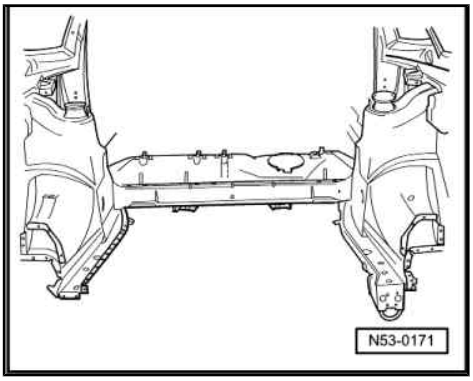

2.1.2 Replacement parts

- Luggage compartment floor subpart
- Bracket for spare wheel
- Bracket for tensioning straps

2.1.3 Welding in

– Measure and mark parting cut, taking into consideration extra for overlap weld above cross member.
– Align floor panel with vehicle stress free and check gaps with rear cross panel and rear lid in position.

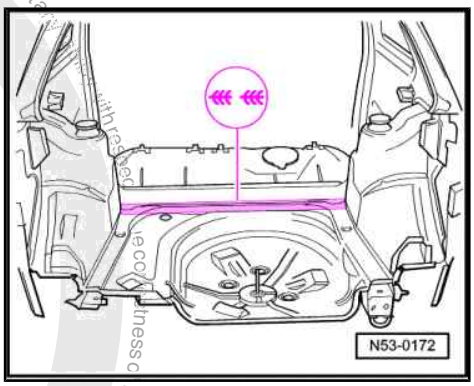

– At parting cut, carry out offset overlap weld to both sides, SG staggered continuous weld seam.
– Weld in luggage compartment floor, RP spot weld seam.

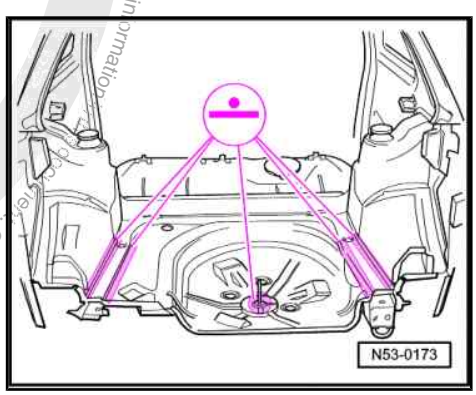

– Spot weld brackets for spare wheel and tensioning straps, RP spot weld seam.
– Weld in luggage compartment floor, SG plug weld seam.
– Weld in cross panel ⇒ page 94 .

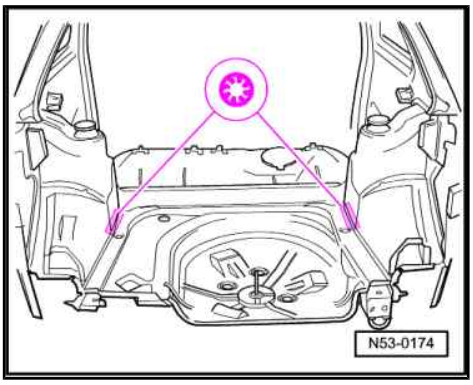

Protected by copyright. Copying for private or commercial purposes, in part or in whole, is not permitted unless authorised by Volkswagen AG. Volkswagen AG does not guarantee or accept any liability with respect to the correctness of information in this document. Copyright by Volkswagen AG.
satelettronica

RO: 53 48 55 56

3 Renewing rear longitudinal member - part section

WARNING

Observe safety notes!

⇒ General Information; Body Repairs, General Body Repairs ; Chapter 1 - Safety notes .

3.1 Removing

3.1.1 Cutting locations

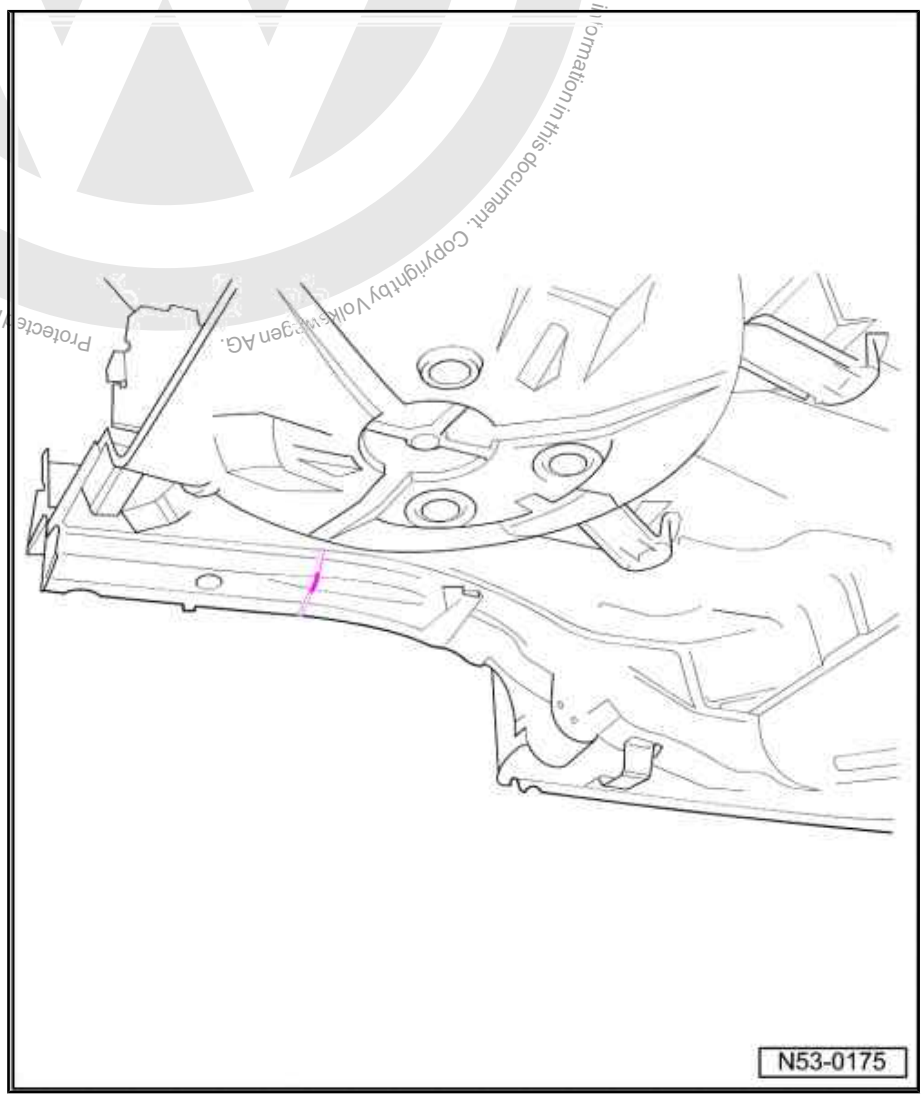

– Cut out longitudinal member.

Protected by copyright. Copyright for private or commercial purposes, in part or in whole, is not permitted unless authorised by Volkswagen AG. Volkswagen AG does not guarantee or accept any liability with respect to the correctness of information in this document. Copyright by Volkswagen AG.
satelettronica

Protected by copyright. Copyright for private or commercial purposes, part or in whole, is not permitted unless authorised by Volkswagen AG. Volkswagen AG does not guarantee or accept any liability with respect to the correctness of information in this document. Copyright by Volkswagen AG.

Note

Due to an internal reinforcing, parting cut is permissible only at this position!

3.1.2 Replacement part

- Rear longitudinal member

3.1.3 Welding in

Preparing new part

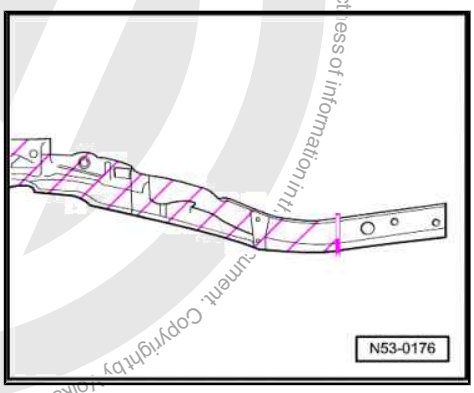

- Transfer parting cut to longitudinal member and cut off shaded section.
- Secure longitudinal member to alignment bracket.
- Butt weld parting cut, SG continuous weld seam.
- Spot weld rear longitudinal member, RP spot weld seam.

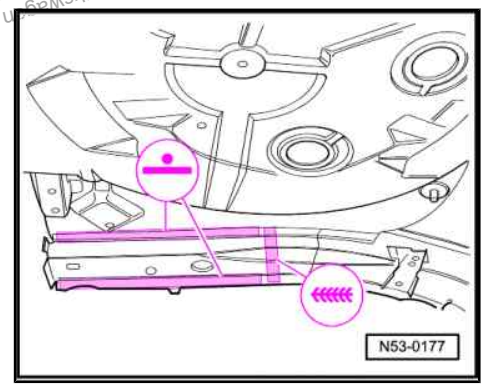

satelettronica

RO: 53 55 55 00

4 Renewing side panel - part section (2-door)

WARNING

Observe safety notes!

⇒ General Information; Body Repairs, General Body Repairs ; Chapter 1 - Safety notes .

4.1 Removing

4.1.1 Cutting locations

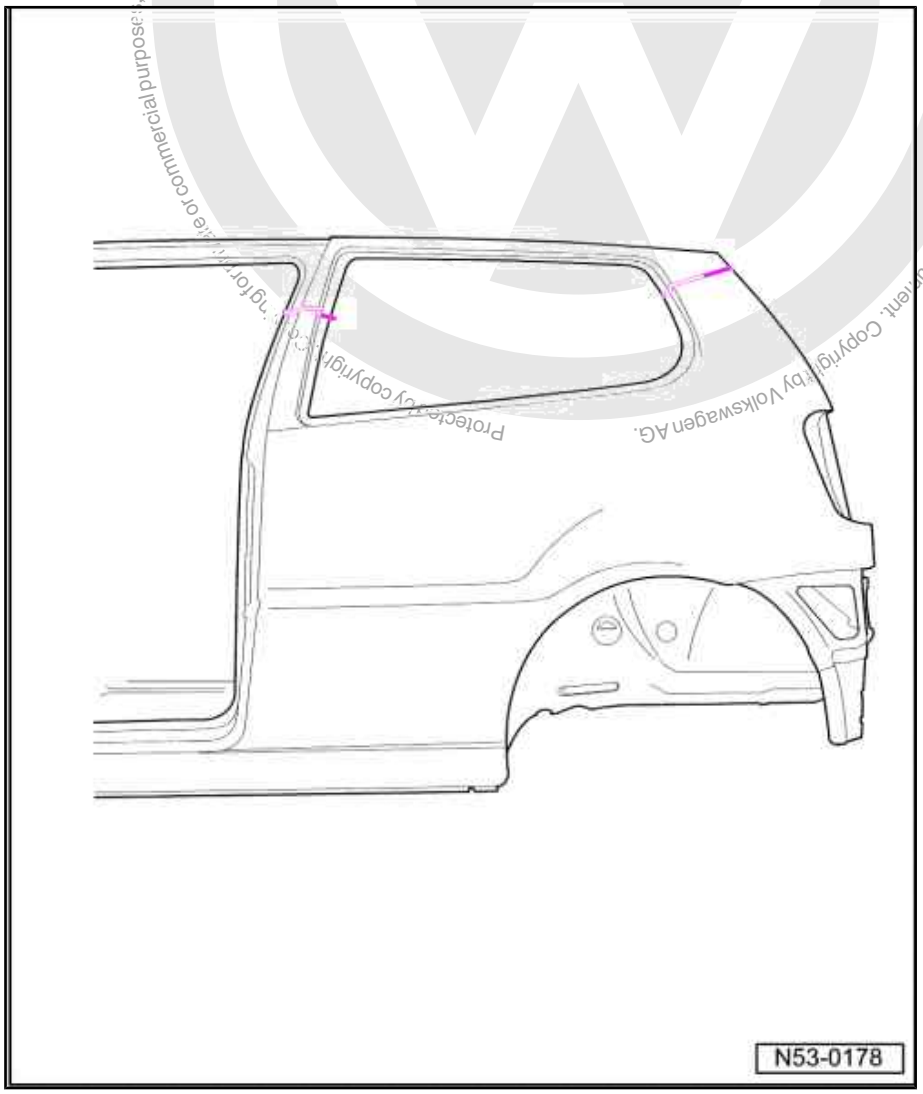

– Make parting cut on B and C-pillar according to degree of damage.

– Cut out side panel.

Protected by copyright. Copying for private or commercial purposes, in part or in whole, is not permitted unless authorised by Volkswagen AG. Volkswagen AG does not guarantee or accept any liability with respect to the correctness of information in this document. Copyright by Volkswagen AG.
satelettronica

– When cutting out side panel, take care not to damage internal reinforcement in B-pillar.
– Remove remaining material.

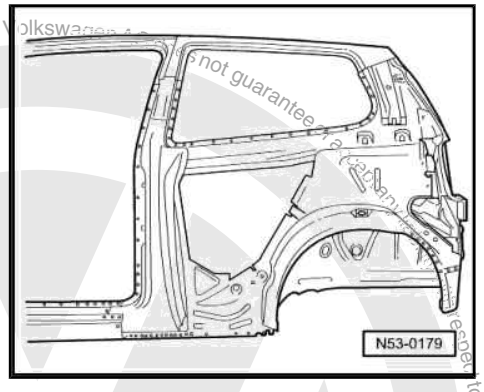

4.1.2 Replacement part

♦ Side panel

4.1.3 Welding in

Preparing new part

– Transfer parting cut to new part and remove shaded area.

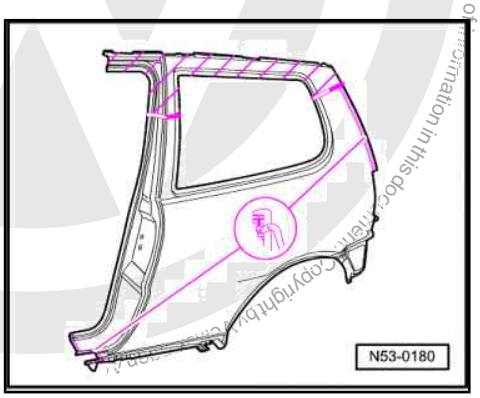

– Make holes in outer joint surface of new part.
– Adapt side member to fit with vehicle free of tension
– Before welding in, check gaps to adjacent parts.
– Place backing material behind parting cut on C-pillar.
– Weld in side panel, RP spot weld seam.

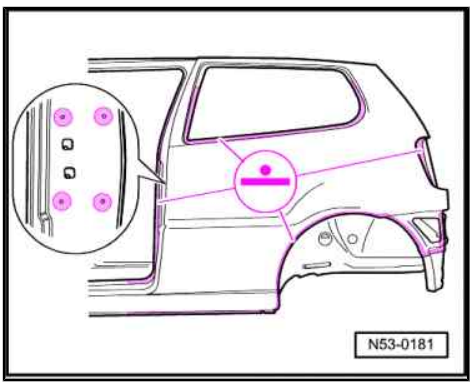

Protected by copyright. Copying for private or commercial purposes, in part or in whole, is not permitted unless authorised by Volkswagen AG. Volkswagen AG does not guarantee or assume any liability with respect to the correctness of information in this document. Copyright by Volkswagen AG.
satelettronica

– Weld in B-pillar reinforcing for striker pin, RP spot weld seam.
– Weld in side panel, SG plug weld seam.

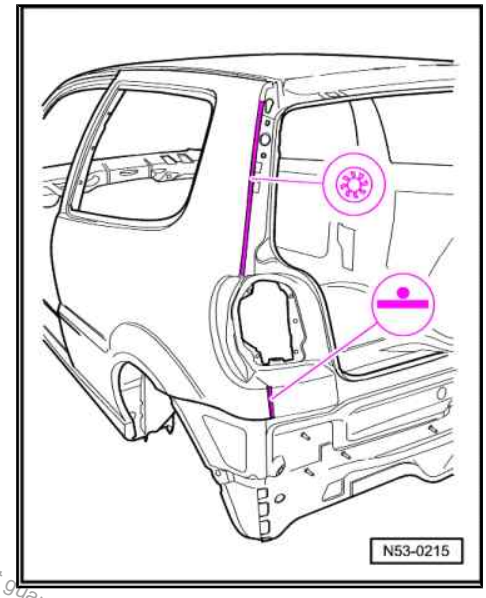

– Weld in insert from inside, RP spot weld seam.
– Weld in parting cuts, SG stepped weld seam.
– Weld in remaining joint, SG plug weld seam.

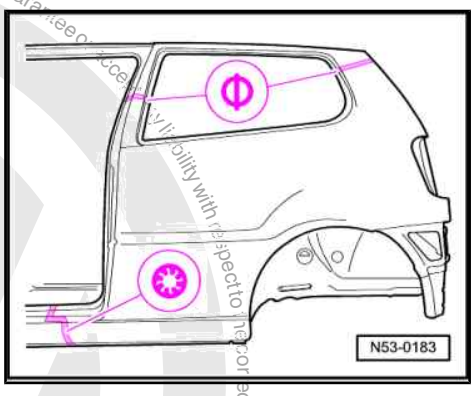

4.1.4 Reforming wheel housing flange

– With introduction of the 14" running gear from model year 1996, the wheel housing flange must be reformed inwards once welding of side panel is complete.

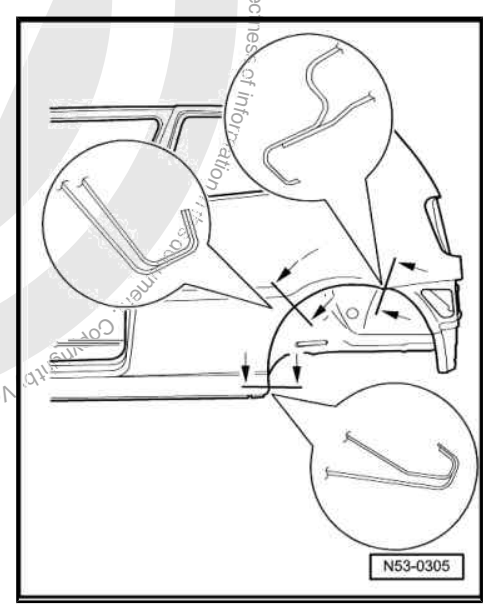

Protected by copyright. Copying for private or commercial purposes, in part or in whole, is not permitted unless authorised by Volkswagen AG. Volkswagen AG does not guarantee or accept any liability with respect to the correctness of information in this document. Copyright by Volkswagen AG.
satelettronica

RO: 53 64 55 00

5 Renewing side panel - part section GTI 11.99 ‣ (2-door)

WARNING

Observe safety notes!

⇒ General Information; Body Repairs, General Body Repairs ; Chapter 1 - Safety notes .

5.1 Removing

Note

- *On vehicles from 11.99, area -A- is additionally welded using laser weld seam.*
- *This weld seam must be ground down with a straight grinder, without damaging the panels underneath.*
- *For repairs the laser weld seam is replaced by a RP spot weld seam.*

5.1.1 Cutting locations

satelettronica

Protected by copyright. Copying for private or commercial purposes, in part or in whole, is not permitted unless authorised by Volkswagen AG. Volkswagen AG does not guarantee or accept any liability with respect to the correctness of information in this document. Copyright by Volkswagen AG.

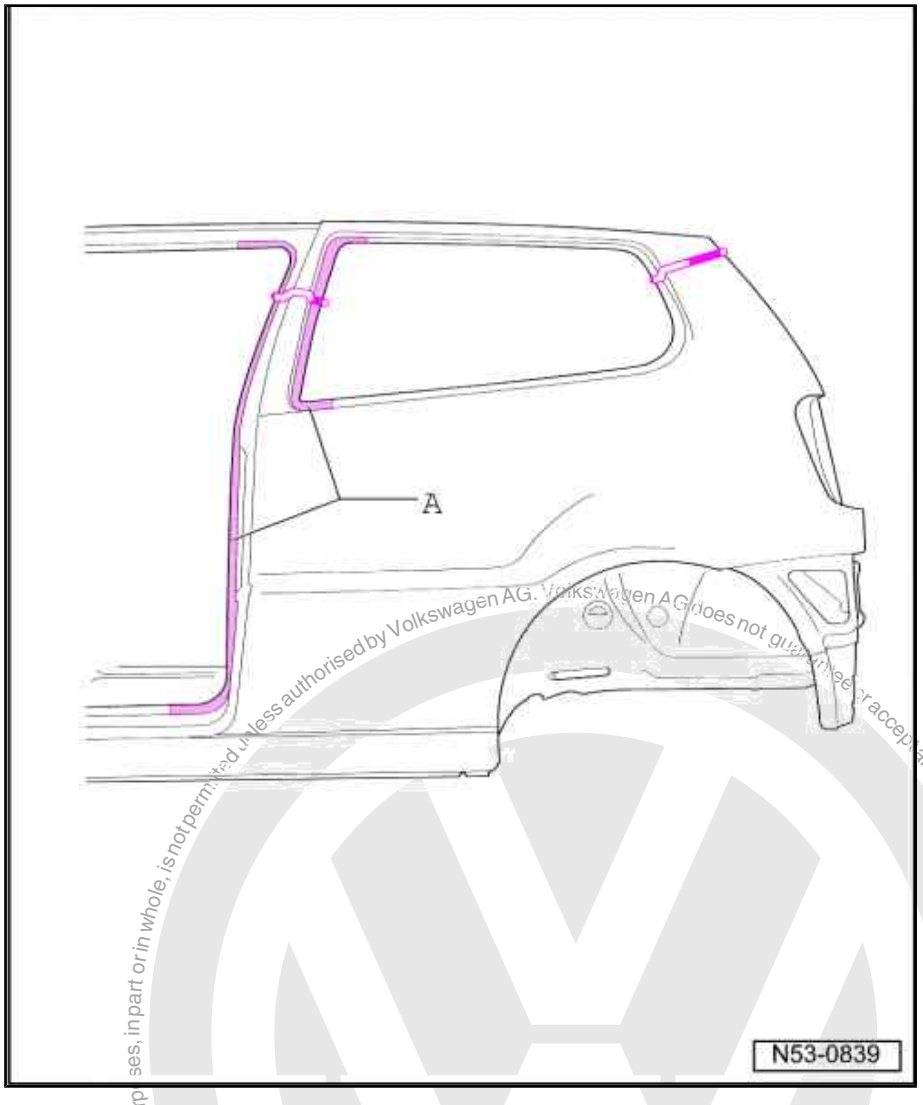

- Make parting cut on B and C-pillar according to degree of damage. Do not damage internal reinforcement.
- Cut out side panel.
- Remove remaining material.

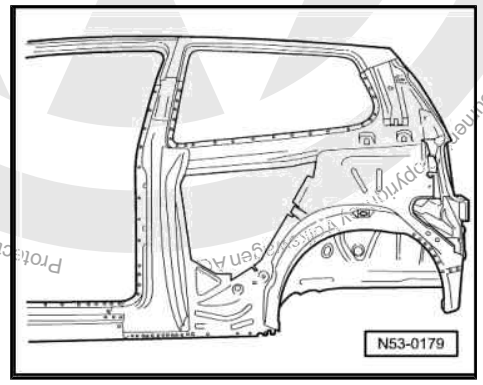

5.1.2 Replacement part

♦ Side panel

Protected by copyright. Copying for private or commercial purposes, in part or in whole, is not permitted unless authorised by Volkswagen AG. Volkswagen AG does not guarantee or accept any liability with respect to the correctness of information in this document. Copyright by Volkswagen AG.
satelettronica

Protected by copyright. Copyright by Volkswagen AG. Volkswagen AG does not guarantee or accept any liability with respect to the accuracy of this information. Copyright by Volkswagen AG.

5.1.3 Welding in

Preparing new part

– Transfer parting cuts to new parts and cut away shaded area.

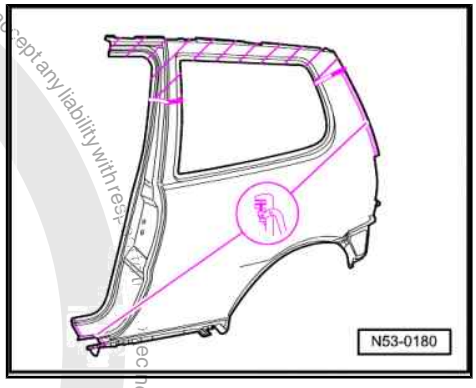

– Make holes in outer joint surface of new part.
– Adapt side member to fit with vehicle free of tension
– Before welding in, check gaps to adjacent parts.
– Place backing material behind parting cut on C-pillar.
– Weld in side panel, RP spot weld seam.

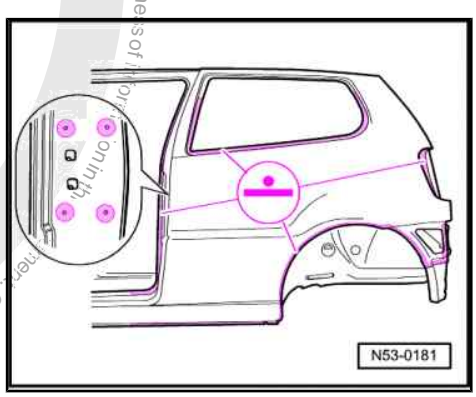

– Weld in B-pillar reinforcing for striker pin, RP spot weld seam.
– Weld in side panel, SG plug weld seam.

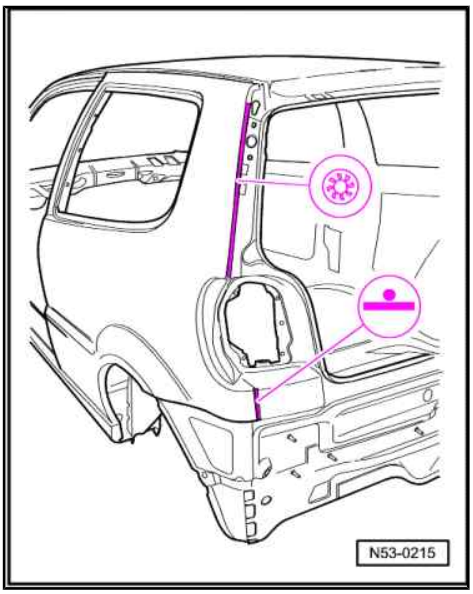

– Weld in insert from inside, RP spot weld seam.
– Weld in parting cuts, SG stepped weld seam.
– Weld in remaining joint, SG plug weld seam.

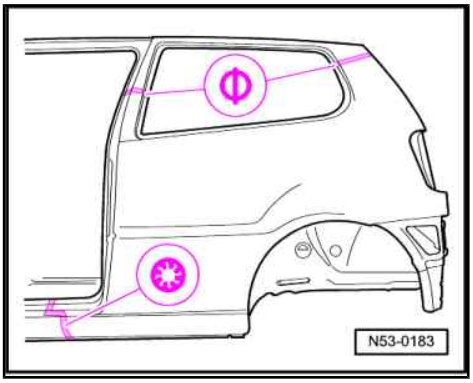

satelettronica

5.1.4 Reforming wheel housing flange

– With introduction of the 14" running gear from model year 1996, the wheel housing flange must be reformed inwards once welding of side panel is complete.

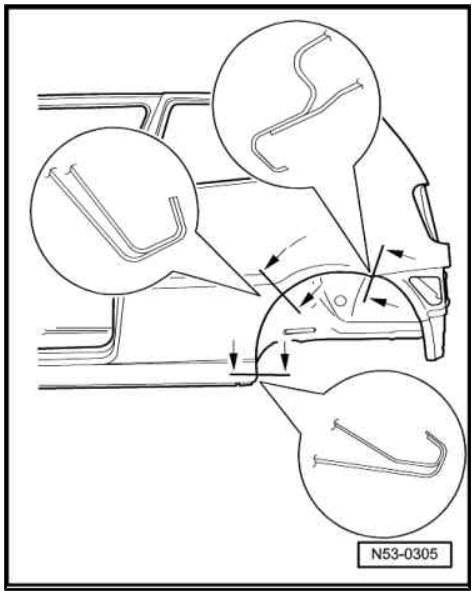

Protected by copyright. Copying for private or commercial purposes, in part or in whole, is not permitted unless authorised by Volkswagen AG. Volkswagen AG does not guarantee or accept any liability with respect to the correctness of information in this document. Copyright by Volkswagen AG.

satelettronica

RO: 53 64 55 00

6 Renewing side panel - part section GTI 11.99 ‣ (2-door)

WARNING

Observe safety notes!

⇒ General Information; Body Repairs, General Body Repairs ; Chapter 1 - Safety notes .

6.1 Removing

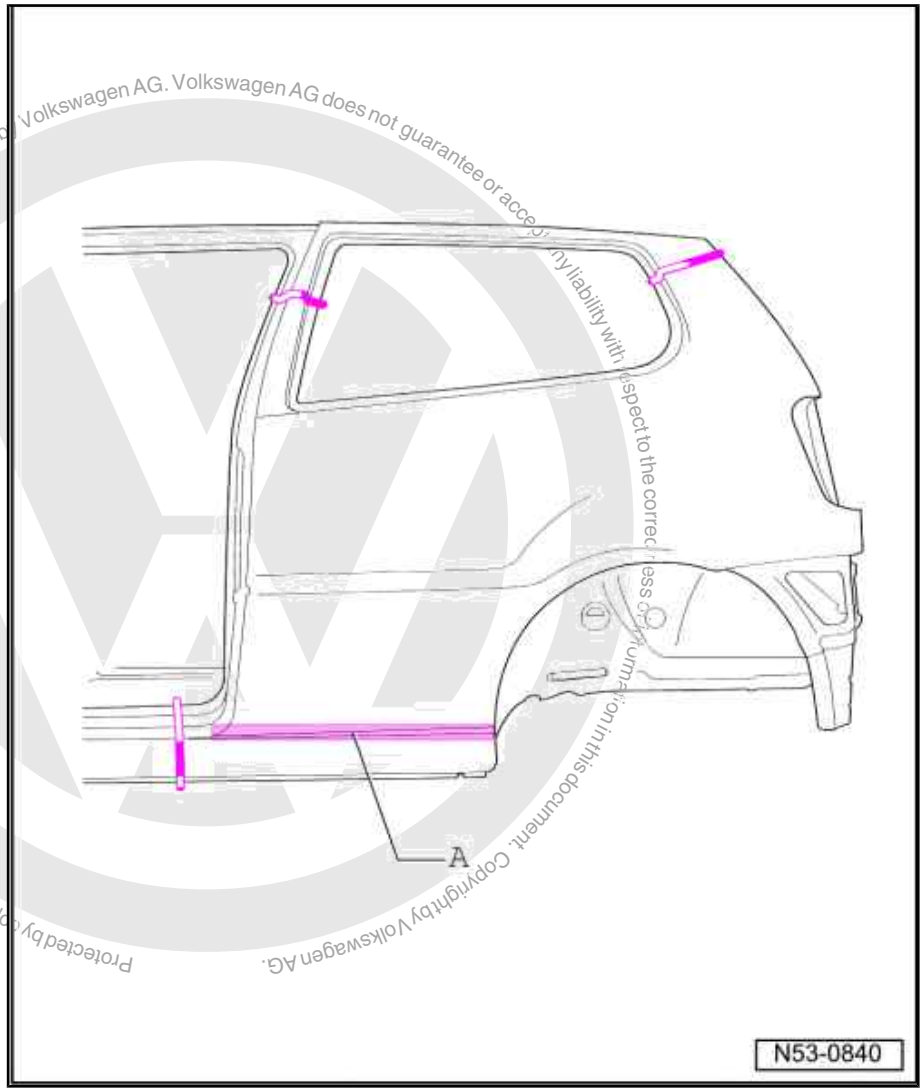

Protected by copyright. Copyright by Volkswagen AG.
Copyright by Volkswagen AG. Volkswagen AG does not guarantee or accept any liability with respect to the correctness of information in this document.
Protected by copyright. Copying for private or commercial purposes, in part or in whole, is not permitted unless authorised by Volkswagen AG.
satelettronica

Note

- *The side panel does not project into the side member, it only goes down to area -A-.*
- *Area -A- is laser welded.*
- *Position side member parting cuts according to degree of damage.*
- *The outer side member must also be replaced as a "part section" as this area is not accessible from the inside in cases of repair.*
- *Weld side panel and outer side member together before welding in.*

6.1.1 Cutting locations

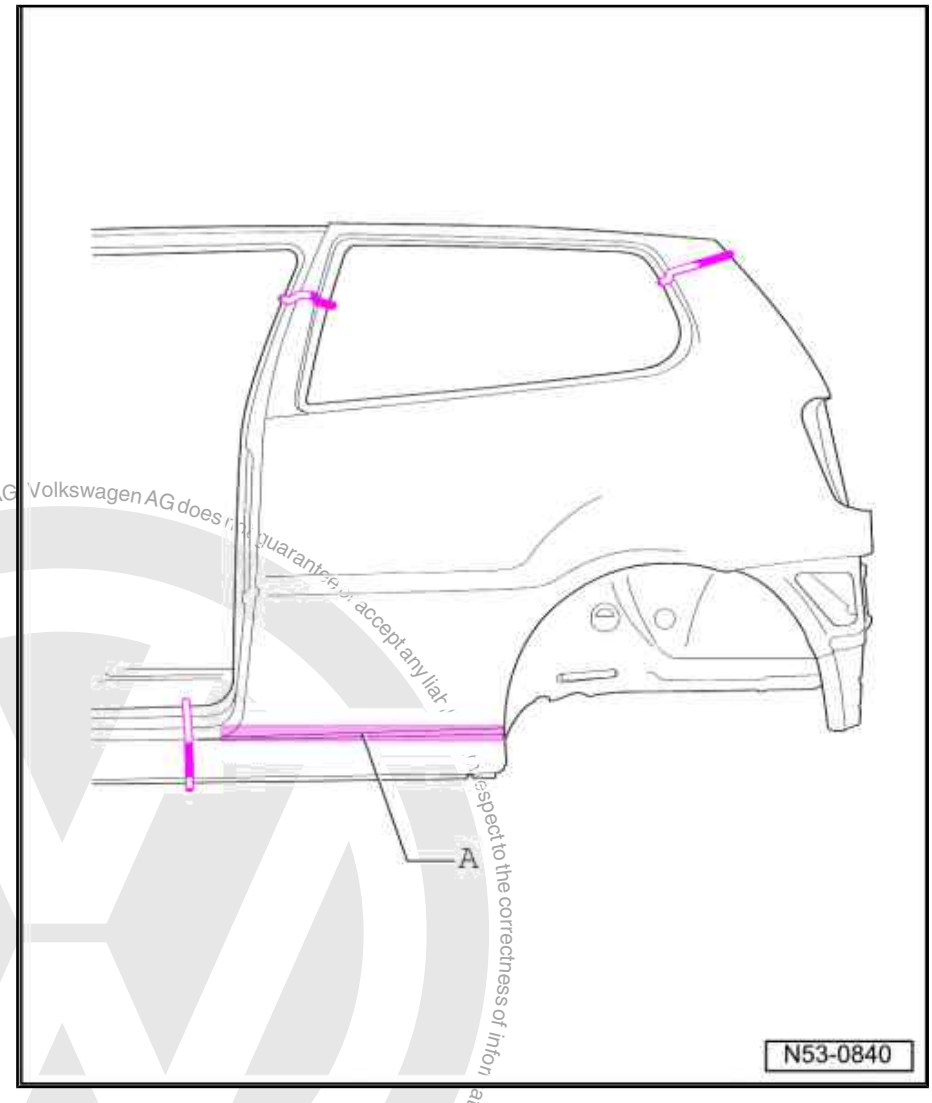

– Make parting cut on B and C-pillar according to degree of damage. Do not damage internal reinforcement.

Protected by copyright. Copying for private or commercial purposes, in part or in whole, is not permitted unless authorised by Volkswagen AG. Volkswagen AG does not guarantee or accept any liability with respect to the correctness of information in this document. Copyright by Volkswagen AG.
satelettronica

– Cut out side panel and side member part section.
– Remove remaining material.

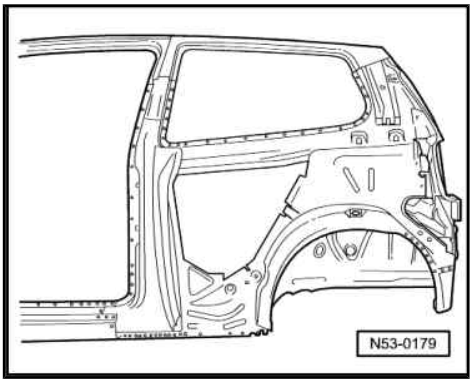

6.1.2 Replacement part

- Side panel
- Outer side member

6.1.3 Welding in

Note

Apply heat dissipation paste, on outside, in area of weld to prevent distortion.

Preparing new part

– Cut out side member, bearing in mind size of replacement part.
– Join side panel and side member together and align.

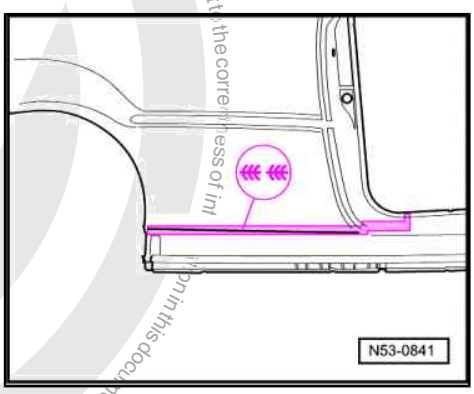

– Weld side panel and side member together on inner side, SG staggered continuous weld seam.
– Transfer parting cut to new part and remove shaded area.

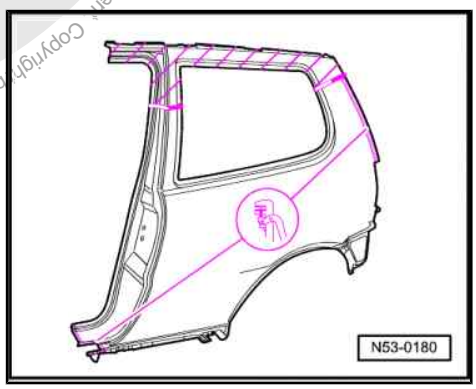

Protected by copyright. Copying for private or commercial purposes, in part or in whole, is not permitted unless authorised by Volkswagen AG. Volkswagen AG does not guarantee or accept any liability with respect to the correctness of information in this document. Copyright by Volkswagen AG.
satelettronica

- Make holes in outer joint surface of new part.
- Adapt side member to fit with vehicle free of tension
- Before welding in, check gaps to adjacent parts.
- Place backing material behind parting cut on C-pillar.
- Weld in side panel, RP spot weld seam.

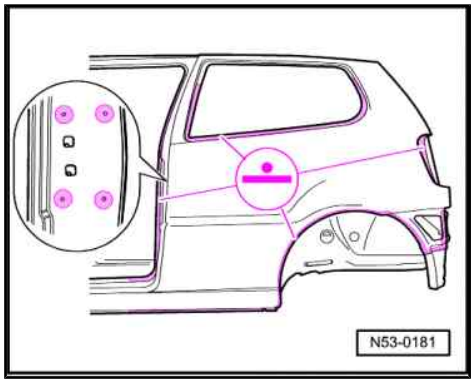

- Weld in B-pillar reinforcing for striker pin, RP spot weld seam.
- Weld in side panel, SG plug weld seam.

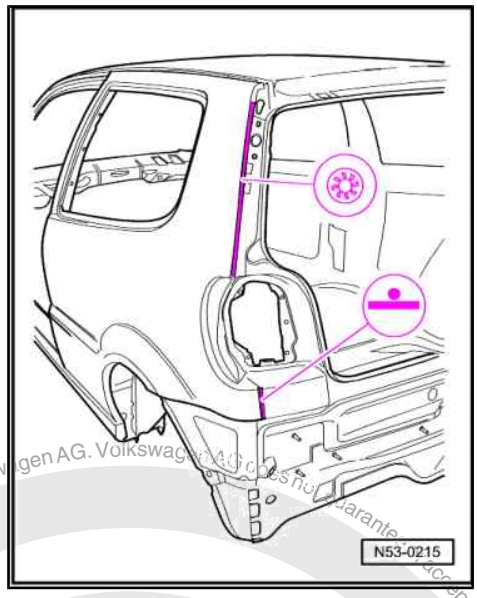

- Weld in insert from inside, RP spot weld seam.
- Weld in parting cuts, SG stepped weld seam.

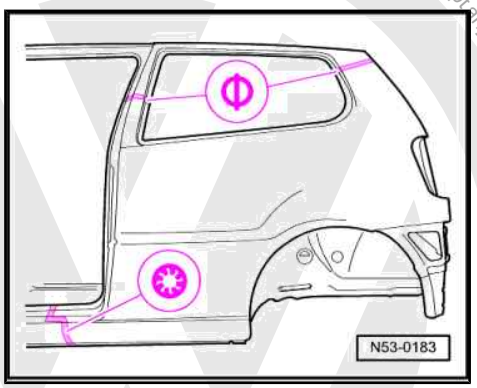

Protected by copyright. Copying for private or commercial purposes, in part or in whole, is not permitted unless authorised by Volkswagen AG. Volkswagen AG does not guarantee or accept any liability with respect to the correctness of information in this document. Copyright by Volkswagen AG.
satelettronica

– Weld in remaining joint, SG plug weld seam.
– Reform wheel housing flange.

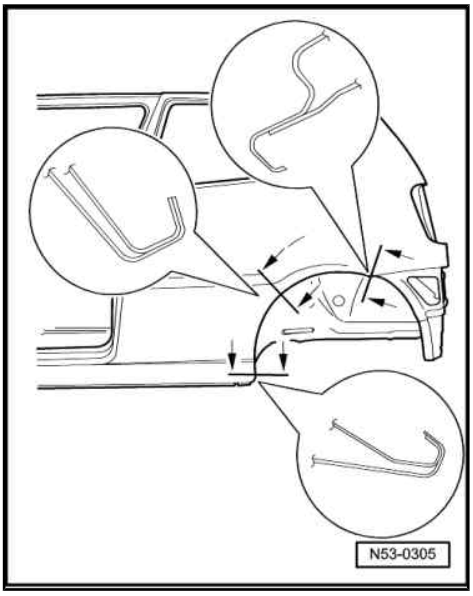

satelettronica

Protected by copyright. Copying for private or commercial purposes, in part or in whole, is not permitted unless authorised by Volkswagen AG. Volkswagen AG does not guarantee or accept any liability with respect to the correctness of information in this document. Copyright by Volkswagen AG.

RO: 53 55 55 02

7 Renewing side panel - part section (4-door)

WARNING

Observe safety notes!

⇒ General Information; Body Repairs, General Body Repairs ; Chapter 1 - Safety notes .

7.1 Removing

7.1.1 Cutting locations

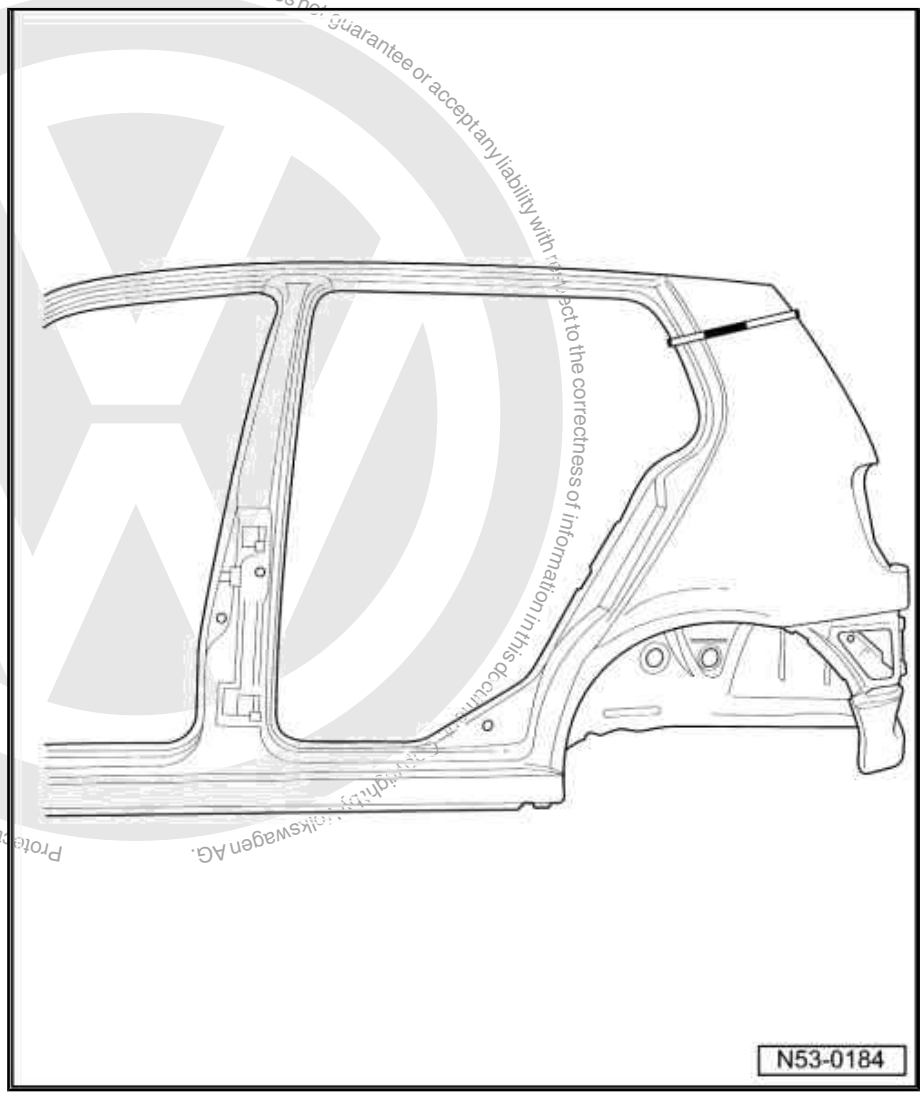

Protected by copyright. Copying for private or commercial purposes, in part or in whole, is not permitted unless authorised by Volkswagen AG. Volkswagen AG does not guarantee or accept any liability with respect to the correctness of information in this document. Copyright by Volkswagen AG.

satelettronica

– Make parting cut on C-pillar according to degree of damage.
– Cut out side panel.

– Separate original joint.
– Remove remaining material.

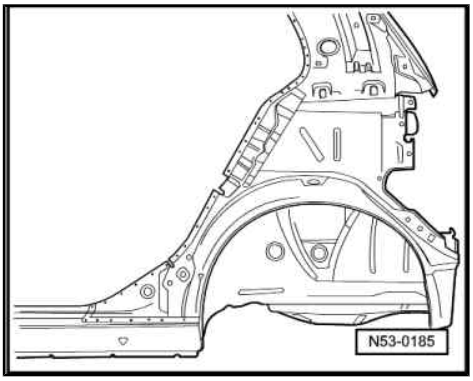

7.1.2 Replacement part

- Side panel
- C-pillar reinforcing for striker pin

7.1.3 Welding in

Preparing new part

– Transfer parting cut to new part and remove shaded area.
– Make holes in outer joint surface of new part.

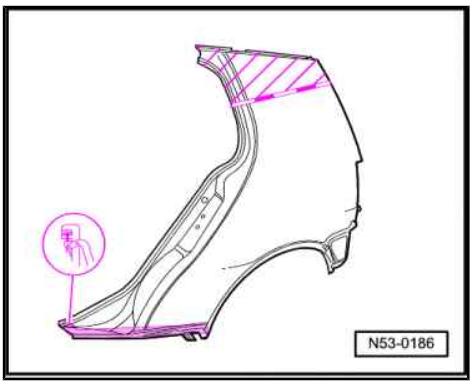

– Spot weld C-pillar reinforcing for striker pin, RP spot weld seam.
– Adapt side member to fit with vehicle free of tension
– Before welding in, check gaps to adjacent parts.
– Place backing material behind parting cut on C-pillar.
– Weld in side panel, RP spot weld seam.
– Weld in parting cut, SG stepped weld seam.

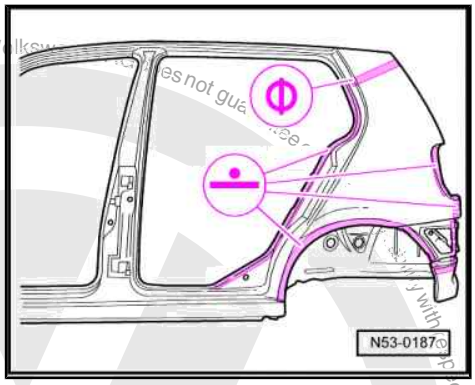

– Weld in insert from inside, RP spot weld seam.
– Weld in side panel, SG plug weld seam.

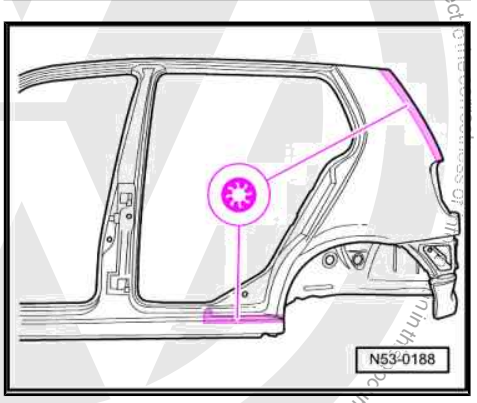

satelettronica

7.1.4 Reforming wheel housing flange

– With introduction of the 14" running gear from model year 1996, the wheel housing flange must be reformed inwards once welding of side panel is complete.

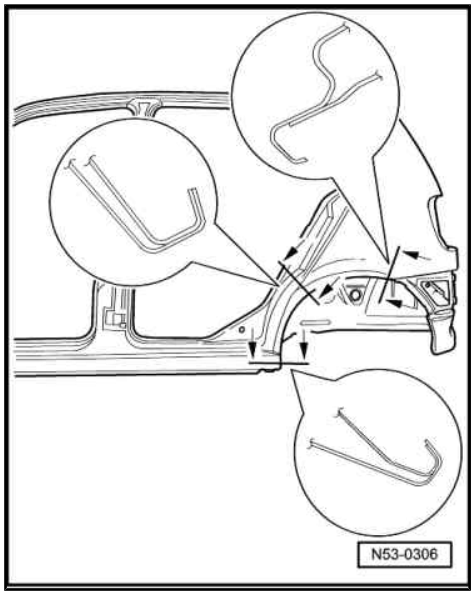

Protected by copyright. Copying for private or commercial purposes, in part or in whole, is not permitted unless authorised by Volkswagen AG. Volkswagen AG does not guarantee or accept any liability with respect to the correctness of information in this document. Copyright by Volkswagen AG.

satelettronica

RO: 53 64 55 00

8 Renewing side panel - part section (2-door)

WARNING

Observe safety notes!

⇒ General Information; Body Repairs, General Body Repairs ; Chapter 1 - Safety notes .

8.1 Removing

Note

Make parting cut above wheel housing with pneumatic sabre saw -V.A.G 1523- .

8.1.1 Cutting locations

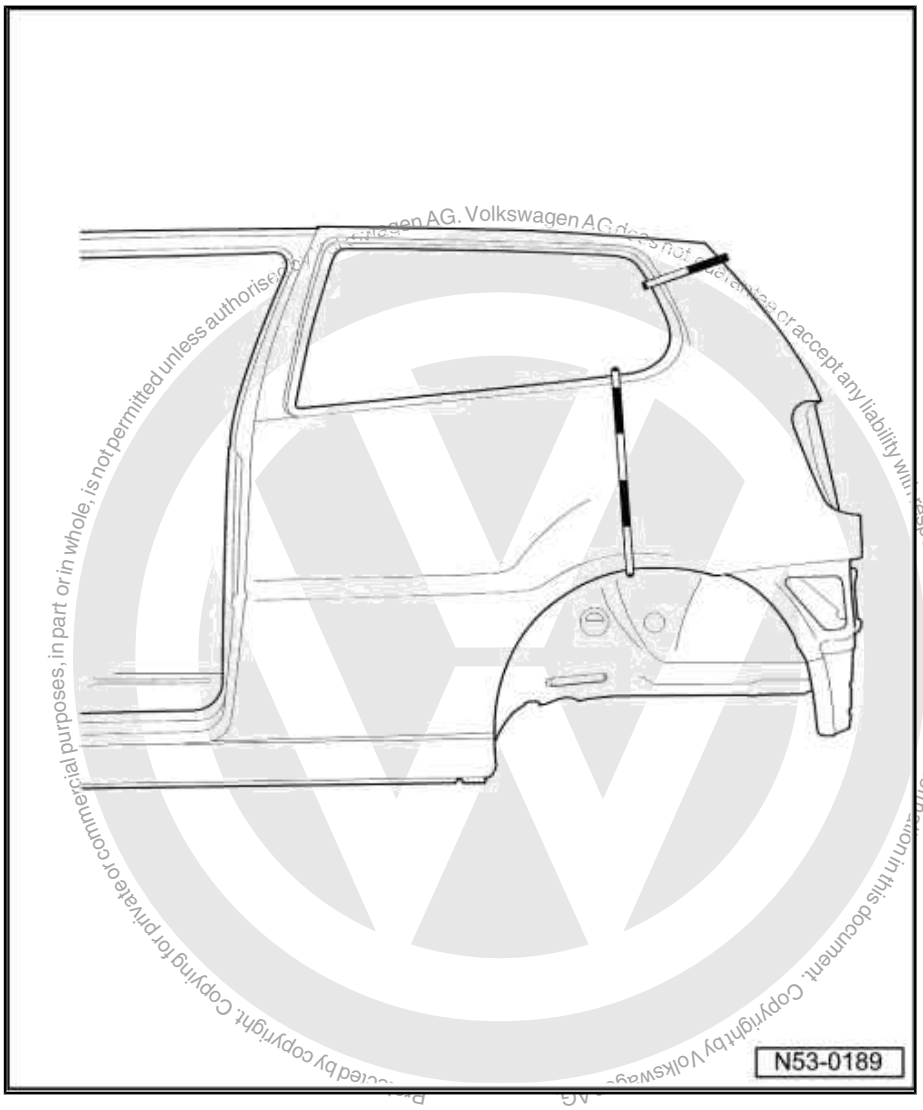

satelettronica

– Cut out side panel.
– Remove remaining material.

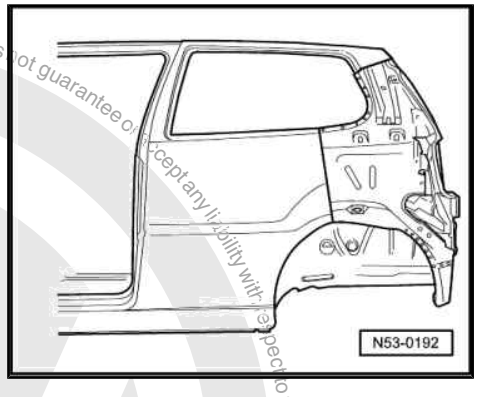

8.1.2 Replacement part

♦ Side panel

8.1.3 Welding in

Preparing new part

– Transfer parting cuts to new parts and cut away shaded area.

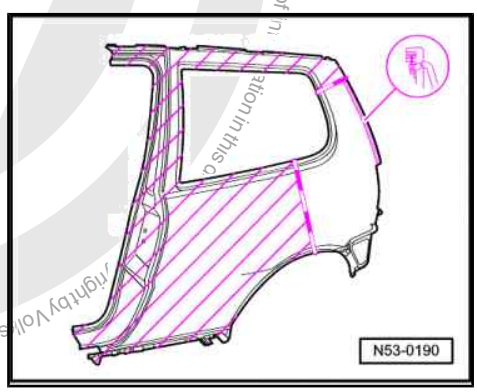

– Make holes in outer joint surface of new part.
– Adapt side member to fit with vehicle free of tension
– Before welding in, check gaps to adjacent parts.
– Place backing material behind parting cuts.
– Weld in parting cuts, SG stepped weld seam.

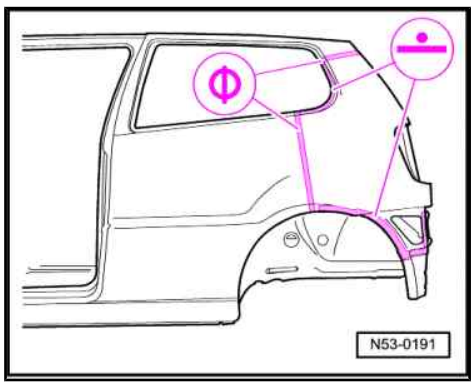

Protected by copyright. Copying for private or commercial purposes, in part or in whole, is not permitted unless authorised by Volkswagen AG. Volkswagen AG does not guarantee or accept any liability with respect to the correctness of information in this copyright by Volkswagen AG.

satelettronica

– Weld in side panel, RP spot weld seam.
– Weld in side panel, SG plug weld seam.
– Weld in insert from inside, RP spot weld seam.

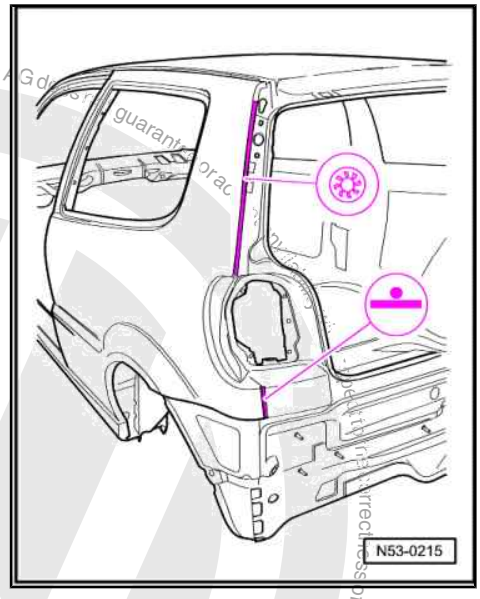

8.1.4 Reforming wheel housing flange

– With introduction of the 14" running gear from model year 1996, the wheel housing flange must be reformed inwards once welding of side panel is complete.

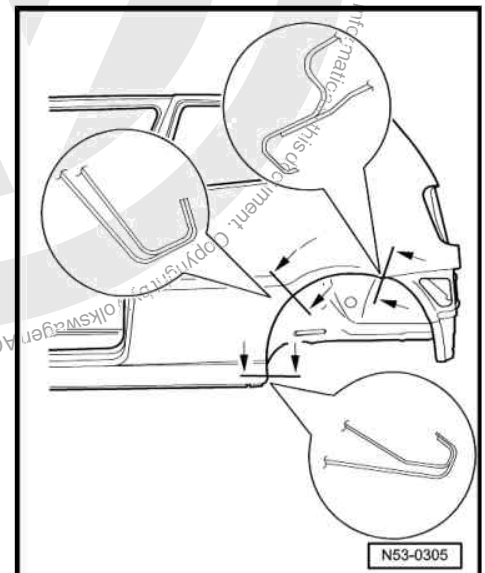

Protected by copyright. Copying for private or commercial purposes, in part or in whole, is not permitted unless authorised by Volkswagen AG. Volkswagen AG does not guarantee or accept any liability with respect to the correctness of information in this document. Copyright by Volkswagen AG.
satelettronica

Protected by copyright. Copyright by Volkswagen AG. Volkswagen AG does not guarantee or accept any liability with respect to the correctness of information in this document. Copying for private or commercial purposes, in part or in whole, is not permitted unless authorised by Volkswagen AG.

RO: 53 67 55 50

9 Renewing reinforcement for wheel housing

WARNING

Observe safety notes!

⇒ General Information; Body Repairs, General Body Repairs ; Chapter 1 - Safety notes .

9.1 Removing

9.1.1 Cutting locations

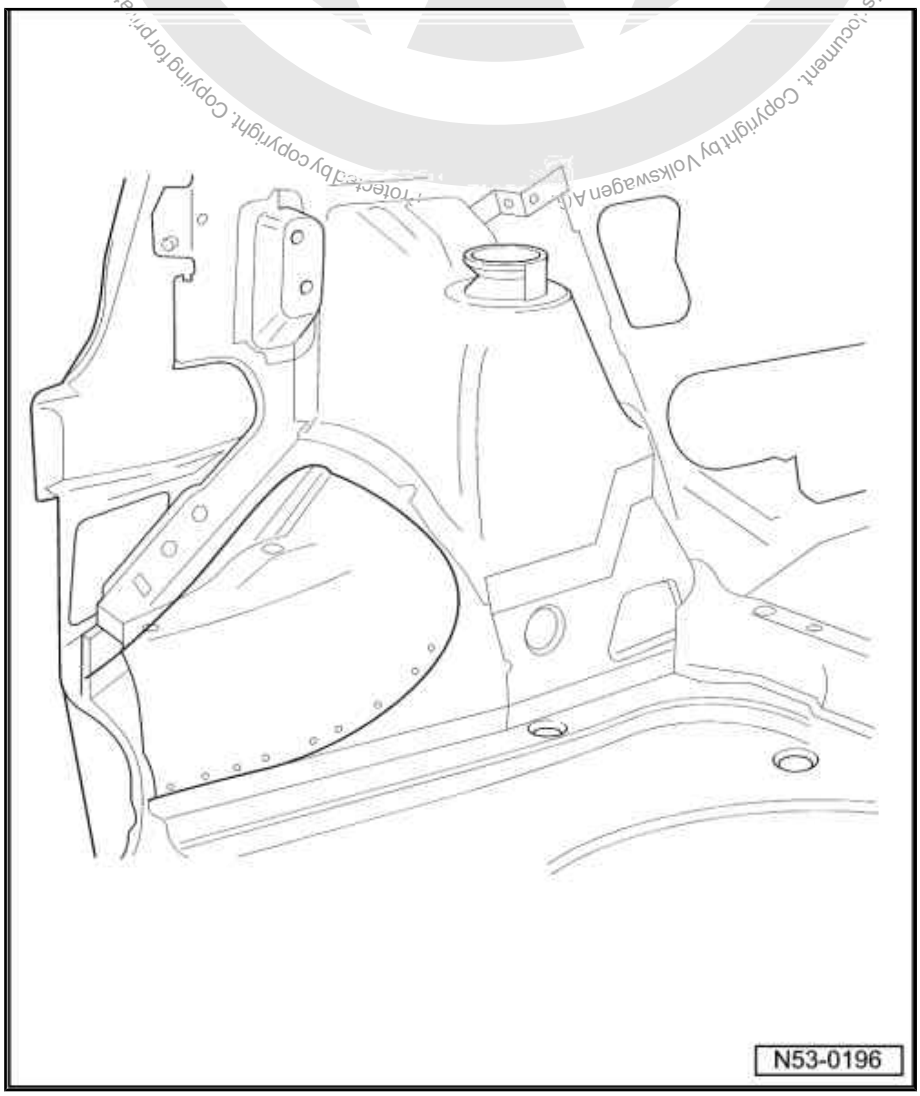

– Separate original joint.
– Remove remaining material.

satelettronica

9.1.2 Replacement part

- Support panel

9.1.3 Welding in

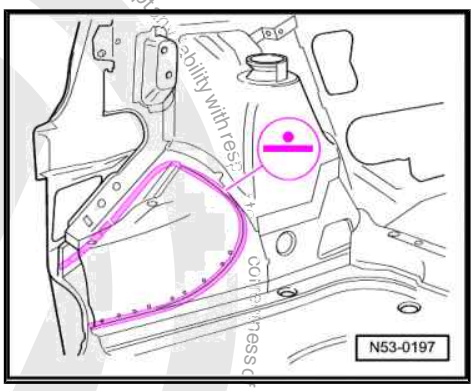

– Check installation position with fitted cross panel and secure new part.
– Remove cross panel.
– Spot weld support panel, RP spot weld seam.
– Weld in cross panel ⇒ page 94 .

Protected by copyright. Copying for private or commercial purposes, in part or in whole, is not permitted unless authorised by Volkswagen AG. Volkswagen AG does not guarantee or accept any liability with respect to the correctness of information in this document. Copyright by Volkswagen AG.
satelettronica

RO: 53 68 55 50

10 Renewing rear wheel housing

WARNING

Observe safety notes!

⇒ General Information; Body Repairs, General Body Repairs ; Chapter 1 - Safety notes .

10.1 Removing

10.1.1 Cutting locations

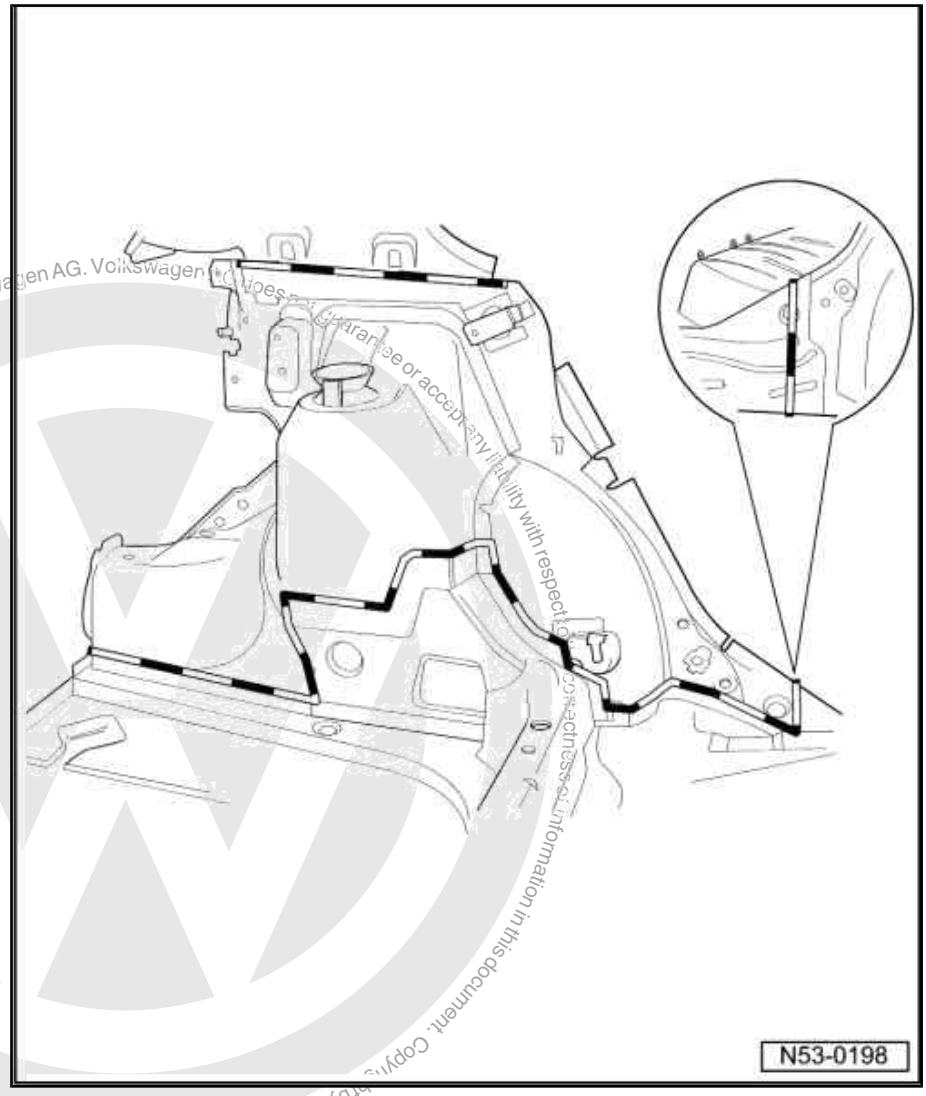

– Cut out wheel housing.

Protected by copyright. Copying for private or commercial purposes, in part or in whole, is not permitted unless authorised by Volkswagen AG. Volkswagen AG does not guarantee or accept any liability with respect to the correctness of information in this document. Copyright by Volkswagen AG.
satelettronica

– Separate carrier panel vertically vertically-enlargement-.
– Remove remaining material.

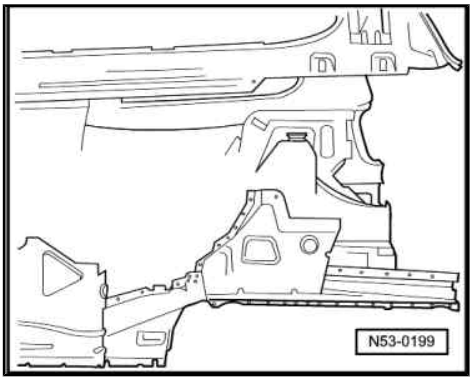

10.1.2 Replacement parts

- Wheel housing
- Outer wheel housing liner
- Carrier panel

10.1.3 Welding in

Preparing new parts

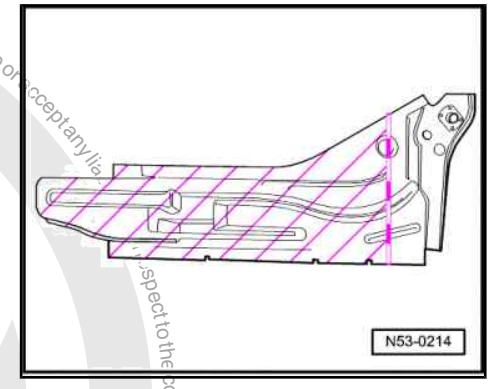

– Transfer parting cut to new part and remove shaded area.
– Secure wheel housing to alignment fixture.
– Mark position of holes for SG plug weld seam.
– Remove wheel housing.

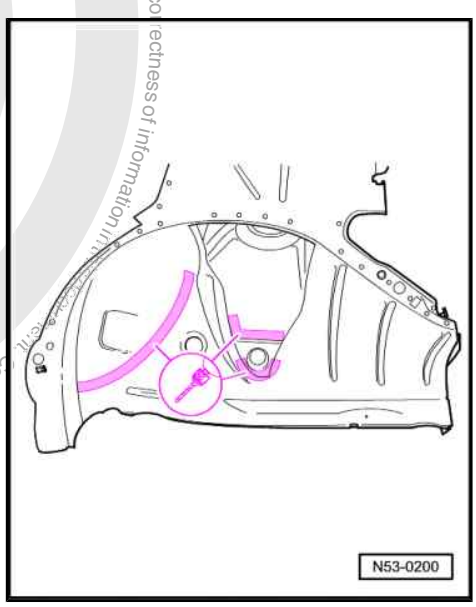

Protected by copyright. Copying for private or commercial purposes, in part or in whole, is not permitted unless authorised by Volkswagen AG. Volkswagen AG does not guarantee or accept any liability with respect to the correctness of information in this document. Copyright by Volkswagen AG.
satelettronica

– Drill holes for SG plug weld seam (7 mm ∅).
– Secure wheel housing to alignment fixture.
– Check precision of fit with attached parts.
– Spot weld wheel housing, RP spot weld seam.

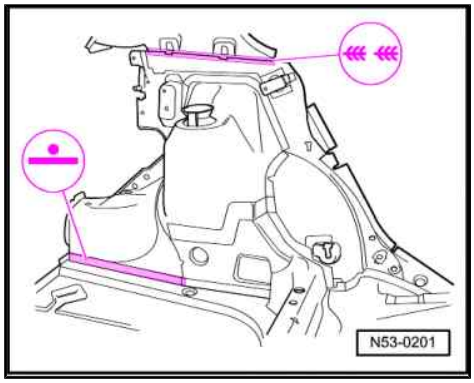

– Weld in remaining joint, SG staggered continuous weld seam.

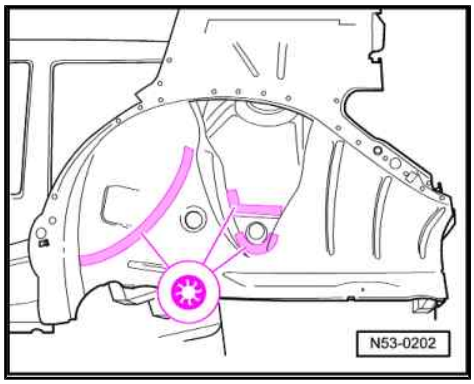

– Weld in wheel housing, SG plug weld seam.

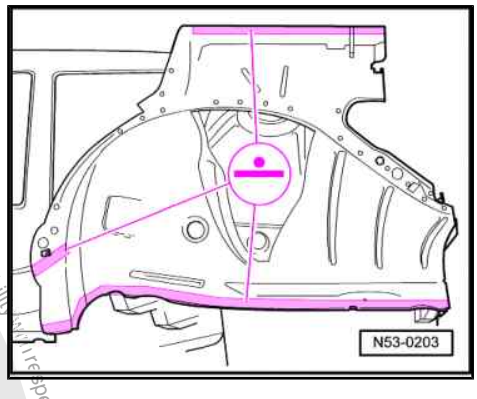

– Spot weld wheel housing, RP spot weld seam.
– Adapt wheel housing liner to fit, and check gaps with side panel fitted and vehicle free of tension.
– Detach side panel.
– Weld in wheel housing liner, RP spot weld seam.

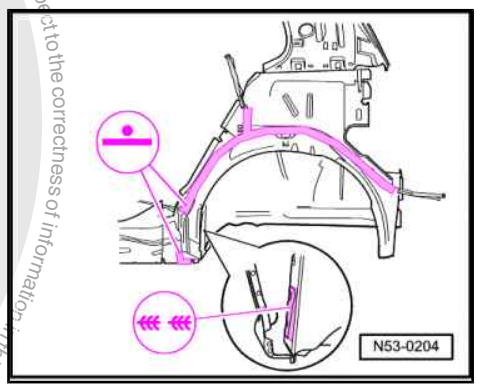

Protected by copyright. Copying for private or commercial purposes, in part or in whole, is not permitted unless authorised by Volkswagen AG. Volkswagen AG does not guarantee or accept any liability with respect to the correctness of information in this document. Copyright by Volkswagen AG.

satelettronica

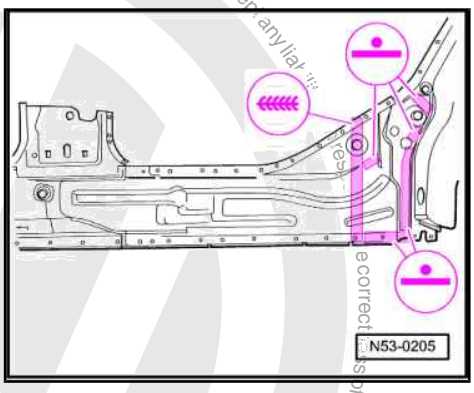

- Weld in remaining joint, SG staggered continuous weld seam.
- Adapt carrier panel to fit and hold in position.
- Butt weld parting cut, SG continuous weld seam.
- Spot weld remaining joint in, RP spot weld seam.
- Weld in side panel for 2-door vehicle ⇒ page 101 .
- Weld in side panel for 4-door vehicle ⇒ page 113 .

Protected by copyright. Copying for private or commercial purposes, in part or in whole, is not permitted unless authorised by Volkswagen AG. Volkswagen AG does not guarantee or accept any liability with respect to the correctness of information in this document. Copyright by Volkswagen AG.
satelettronica

Protected by copyright. Copying for private or commercial purposes, in part or in whole, is not permitted unless authorised by Volkswagen AG. Volkswagen AG does not guarantee or accept any liability with respect to the correctness of information in this document. Copyright by Volkswagen AG.

RO: 53 68 55 62

11 Renewing rear wheel housing - part section

WARNING

Observe safety notes!

⇒ General Information; Body Repairs, General Body Repairs ; Chapter 1 - Safety notes .

11.1 Removing

11.1.1 Cutting locations

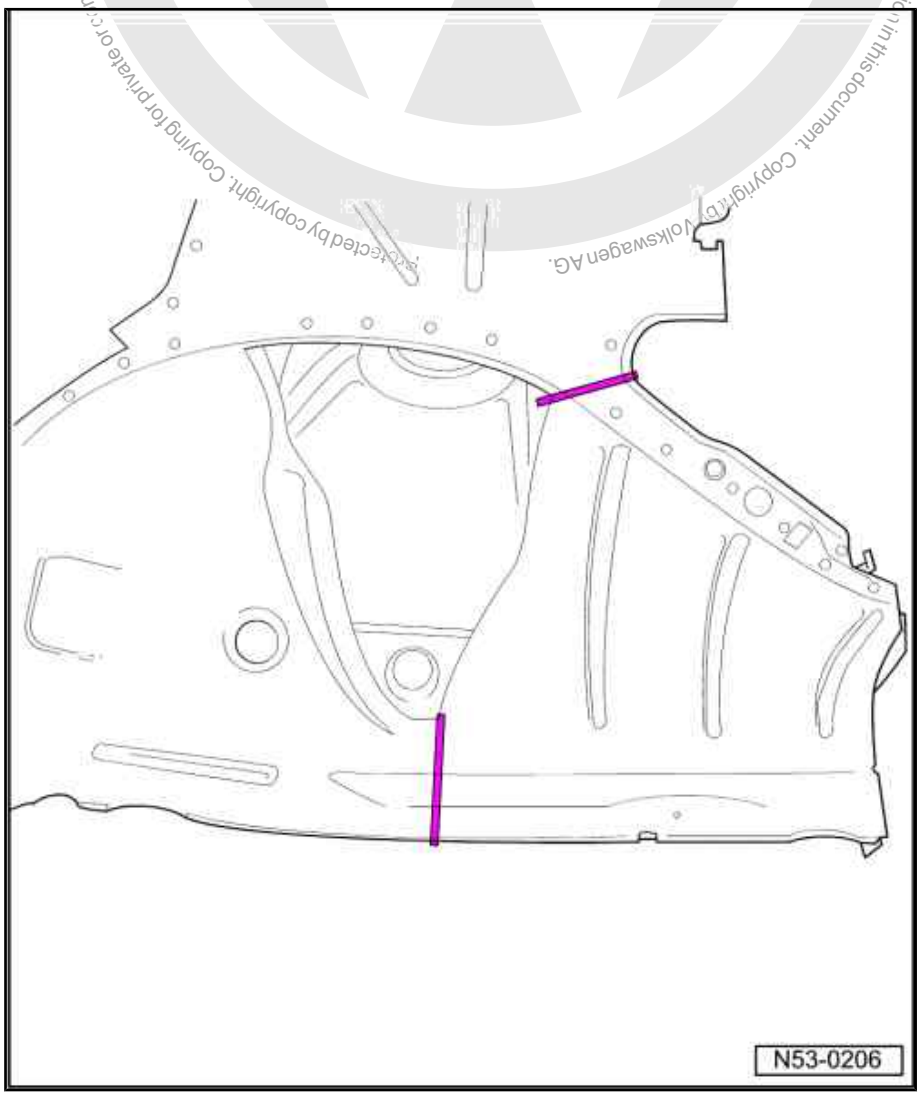

satelettronica

– Cut out wheel housing.
– Remove remaining material.

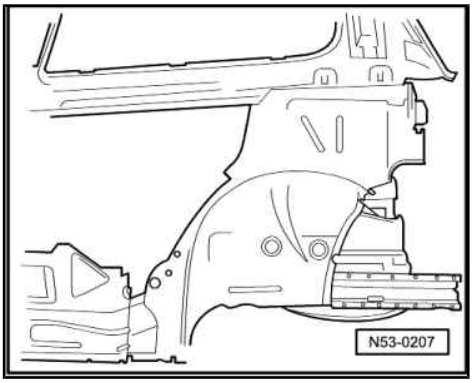

11.1.2 Replacement part

- Wheel housing
- Support panel

11.1.3 Welding in

Preparing new part

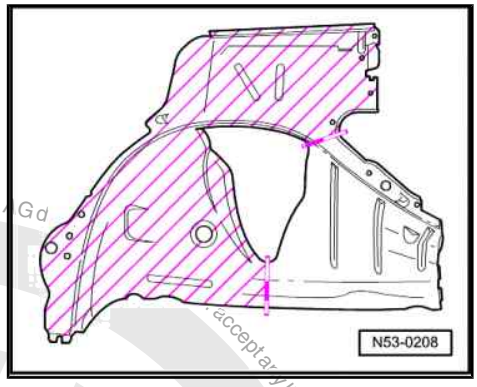

– Transfer parting cut to new part and remove shaded area.
– Adapt new part to fit and fix in position.
– Check precision of fit with attached parts.
– Butt weld parting cuts, SG continuous weld seam.
– Spot weld wheel housing, RP spot weld seam.
– Weld in wheel housing reinforcing ⇒ page 119 .

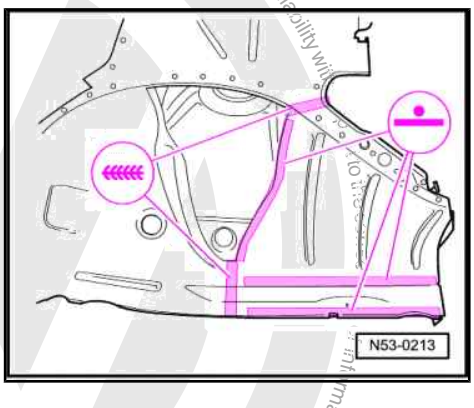

satelettronica
Protected by copyright. Copying for private or commercial purposes, in part or in whole, is not permitted unless authorised by Volkswagen AG. Volkswagen AG does not accept any liability with respect to the correctness of information in this document. Copyright by Volkswagen AG.

RO: 53 69 55 50

12 Renewing outer wheel housing liner

WARNING

Observe safety notes!

⇒ General Information; Body Repairs, General Body Repairs ; Chapter 1 - Safety notes .

12.1 Removing

Note

Leave an approx. 20 mm wide strip in area of front overlap -enlargement-

12.1.1 Cutting locations

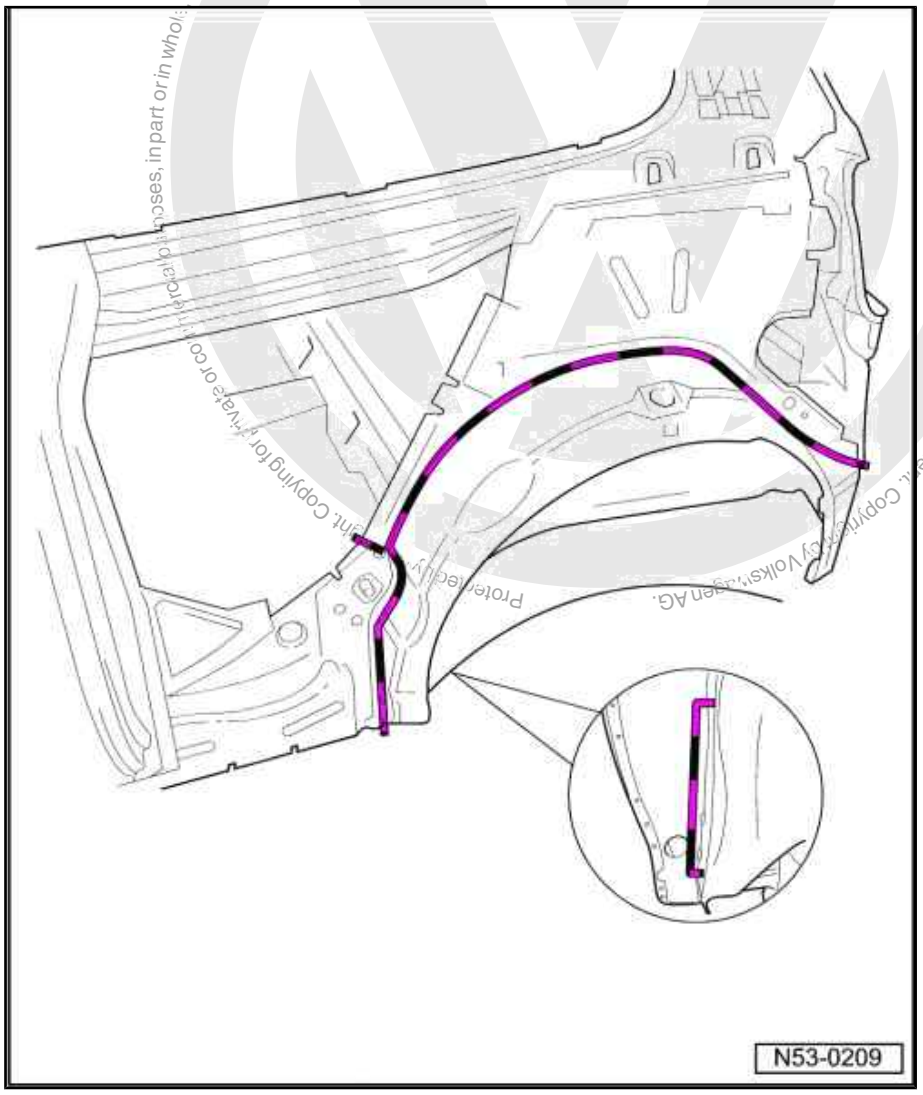

Protected by copyright. Copying for private or commercial purposes, in part or in whole, is not permitted unless authorised by Volkswagen AG. Volkswagen AG does not guarantee or accept any liability with respect to the correctness of information in this document. Copyright by Volkswagen AG.
satelettronica

– Cut out wheel housing liner.
– Remove remaining material.

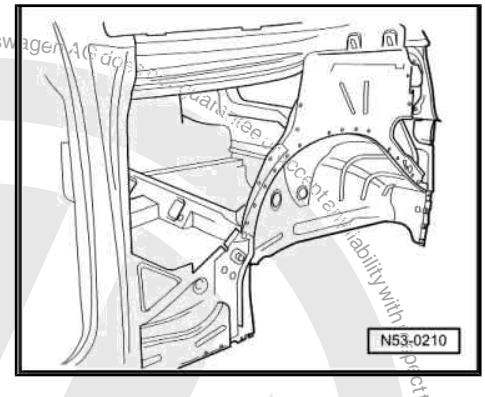

12.1.2 Replacement part

♦ Outer wheel housing liner

12.1.3 Welding in

Preparing new part

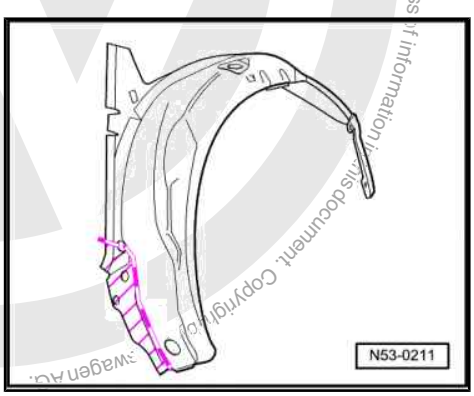

– Transfer separating cut to new part plus 10 mm for overlap. Cut off shaded area.
– Adapt new part to fit and fix in position.
– Adapt wheel housing liner to fit, and check gaps with side panel fitted and vehicle free of tension.
– Detach side panel.
– Spot weld wheel housing liner, RP spot weld seam.
– Butt weld parting cut, SG continuous weld seam.
– Weld in side panel for 2-door vehicle ⇒ page 101 .
– Weld in side panel for 4-door vehicle ⇒ page 113 .

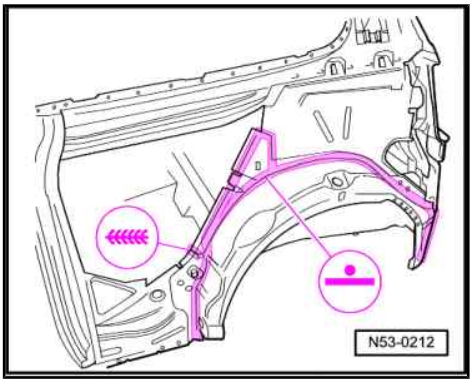

Protected by copyright. Copying for private or commercial purposes, in part or in whole, is not permitted unless authorised by Volkswagen AG. Volkswagen AG does not guarantee or accept any liability with respect to the correctness of information in this document. Copyright by Volkswagen AG.
satelettronica